Let's grow together

F2/F3/F4

Electric Pallet Truck

Operation Manual

Original Instruction

Part No.508000005071
V4 06/2024

EP-Your Partner

EP EQUIPMENT CO.,LTD. is one of the world's leading companies manufacture, which design material handling equipment and provide related service. With over 100,000 square metres plant it produces over 100,000 trucks per year, and provides professional, effective and optimized material handling solutions worldwide, until now it has developed three major kinds of business:

- Material handling equipment: Focus on electric forklift and warehouse equipment
- OEM parts: Global parts supply
- Imow industry,online: One-stop
- industrial products supply

Guided by our customer-oriented concept, EP has developed service centers in more than 30 countries around the world, from which customers are able to receive timely local service. Moreover, 95% of warranty parts can be shipped out within 24 hours after been ordered. Through our online after-sales service system, customers can process their warranty claims, order spare parts and consult the operation manuals, maintenance materials and spare parts catalogs.

With business all over the world, EP has thousands of employees and hundreds of agents worldwide to provide our global customers with prompt local service.

Based on the concept of sharing economy, EP also offer rental service for various logistics equipment. Adhering to the idea "Making the leasing of logistic equipment more simple", EP is devoted to providing customized one-stop leasing solutions for our customers with our high quality, reasonable price and prompt rental service.

EP's mission&vision is " Let more people apply the electrical material handling equipment to relieve the intensity of labour" and "Let's grow together".

EP Equipment Group
Alsembergsesteenweg 454A, 1653 Dworp, Belgium
Tel: +32 2 896 5350
E-Mail: info@ep-equipment.eu

EP EQUIPMENT CO., LTD
Address: No.1 Xiaquan Village, Lingfeng Street, Anji, Huzhou, Zhejiang
Tel: + 86-0571-28023920
Website: www.ep-ep.com
Email: service@ep-ep.com

Foreword

This operation manual provides instructions to ensure the safe operation of the industrial truck. The instructions are clear and concise.

Our trucks are continuously being developed. EP Equipment reserves the right to make changes to the design, equipment, and technical specifications of the system. This operation manual does not provide guarantees for specific features of the truck.

➢ Safety notices and text mark-ups

Safety instructions and important explanations are indicated by the following graphics:

⚠ DANGER

Means that failure to comply can cause risk to life and/or major damage to property.

⚠ WARNING

Please strictly adhere to these safety instructions to avoid personal injury or major damage to equipment.

⚠ CAUTION

Please pay attention to the important safety instructions.

ⓘ NOTE

Pay attention to Instruction.

ALL RIGHTS RESERVED

2024.06 01st EDITION

➢ Internet address and QR code of Parts manual

By entering the address http://www.ep-care.com in a web browser or by scanning the QR code, Login after registration, Select “Parts purchase" function and input part number or model name to find the truck.

NOTE: After registration, please send email to info@ ep-care.com to activate your account

0000-00359OM

➢ Conformity marking

The manufacturer uses the conformity mark-ing to document the conformity of the industrial truck with the relevant directives at the time

of placing on the market:

- CE: in the European Union (EU)
- UKCA: in the United Kingdom (UK)

The conformity marking is applied to the nameplate. A declaration of conformity is issued for the EU and UK markets.

An unauthorised structural change or addition to the industrial truck can compromise safety, thus invalidating the declaration of conformity.

0000-00001-2OM

➢ Schematic views

View of functions and operations

This documentation explains the (usually sequential) chain of certain functions or operations. Schematic diagrams of a counterbalance truck are used to illustrate these procedures.

These schematic diagrams are not representative of the structural state of the documented truck. The diagrams are used solely for the purpose of clarifying procedures.

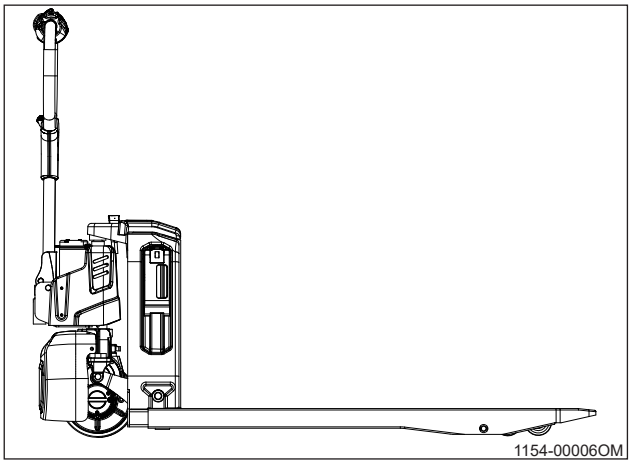

1154-00006OM

EC declaration of conformity

Declaration

EP EQUIPMENT CO., LTD.

Address: No.1 Xiaquan Village, Lingfeng Street, Anji, Huzhou, Zhejiang

We declare that the machine

Industrial truck type: corresponding to these this operation manual

Model: corresponding to these this operation manual

Serial No.: corresponding to these this operation manual

Fulfills all the relevant provisions of Directives

− "Machinery Directive 2006/42/EC" [1)]

− "EU directive 2014/30/EU"[1)]

− "Supply of Machinery Safety Regulations 2008(2008 No. 1597)" [2)]

− "Electromagnetic Compatibility Regulations 2016 (SI 2016 No.1091)[2)]

Personnel authorised to compile the technical documents:

See EC/EU Declaration of Conformity

EP EQUIPMENT CO., LTD.

1) For the markets of the European Union, the EU candidate countries, the EFTA States and Switzerland.

2) For the United Kingdom market.

The declaration shown explains the conformity with the provisions of the EC Machinery Directive 2006/42/EC and the Supply of Machinery Safety Regulation 2008, 2008 No. 1597.The declaration shown explains the conformity with the provisions of EU directive 2014/30/EU(Electromagnetic Compatibility - EMC) and Electromagnetic Compatibility Regulations 2016, SI 2016 No.1091.

An unauthorised structural change or addition to the industrial truck can compromise safety, thus invalidating the declaration of conformity.

Table of contents

Pg.

1 General ... 1
1.1 Introduction ... 1
1.1.1 Introduction to/purpose of this instruction handbook ... 1
1.1.2 Mounting of attachments ... 1
1.1.3 Modification ... 1
1.1.4 Pallet truck handover ... 1
1.2 Definition of responsible persons ... 2
1.2.1 Drivers/Operator ... 2
1.2.2 User ... 2
1.2.3 Specialist ... 2
1.2.4 User rights, duties and rules of behaviour ... 2
1.2.5 Driver rights, duties and rules of behaviour ... 2
1.2.6 Permissable operating conditions ... 3
1.2.7 Wind loads ... 4
1.2.8 Intended use ... 4
1.2.9 Impermissible use ... 5
2 Truck description ... 7
2.1 Truck overview ... 7
2.1.1 Truck components ... 7
2.1.2 Function Description ... 10
2.1.3 Standard Version Specifications ... 10
2.1.4 Dimensions ... 13
2.1.5 Identification points ... 16
2.1.6 Truck data plate ... 17
2.2 Display and Controls ... 18
2.2.1 Tiller ... 18
2.2.2 Key switch ... 20
2.2.3 Battery charge indicator ... 20
2.3 Related Safety Instruction and Standard (For CE) ... 21
2.3.1 Electrical requirements ... 21
2.3.2 Vibrations ... 21
2.3.3 Continuous sound level ... 21
2.3.4 Electromagnetic compatibility (EMC) ... 21
3 Safety ... 22

Table of contents

Pg.

3.1 Safety Instructions 22
3.2 Safety regulations for the operation of truck 22
4 Operation 26
4.1 Checks and tasks before daily use 26
4.2 Using the truck 27
4.2.1 Commissioning 27
4.2.2 Environmental considerations 28
4.2.3 During running-in 28
4.2.4 Defining directions 28
4.2.5 Truck starting 29
4.2.6 Running 30
4.2.7 Steering 32
4.2.8 Parking the truck securely 32
4.2.9 Braking 33
4.2.10 Using the truck on a slope 35
4.3 Handling loads 36
4.3.1 Loading 36
4.3.2 Transporting loads 36
4.3.3 Unloading 37
4.3.4 Goods picking 37
4.4 Transport 38
4.4.1 Location for lifting and/or slinging points 38
4.4.2 Securing the truck during transport 39
4.4.3 Transport 39
4.5 Battery and Chager 42
4.5.1 Information for battery and charger 42
4.5.2 Safety regulations for Charging the battery 42
4.5.3 Charging the battery with an external charger 43
4.5.4 Battery removal and installation 46
4.6 Cleaning 48
5 Maintenance 49
5.1 Operational safety and environmental protection 49
5.2 Maintenance Safety Regulations 49
5.3 Servicing and inspection 51
5.4 Lubrication Points 53

Table of contents

Pg.

5.4.1 Lubricant chart 53
5.5 Maintenance Instructions 54
5.5.1 Prepare the truck for maintenance and repairs 54
5.5.2 Remove the cover 54
5.5.3 Checking the gear oil level and replace gear oil 54
5.5.4 Checking and replace hydraulic oil 55
5.5.5 Checking electrical fuses 55
5.5.6 Servicing wheels and tyres 55
5.6 Decommissioning the trucks 55
5.6.1 Prior to decommissioning 56
5.6.2 Restoring the truck to operation after decommissioning 56
5.6.3 Final decommissioning, disposal 56
6 Troubleshooting 58

1 General

1.1 Introduction

1.1.1 Introduction to/purpose of this instruction handbook

The truck described in this operator manual is designed for lifting and transporting material loads. It must be used, operated, and serviced as specified in the following instructions. Any other type of use is beyond the scope of application and can result in damage to personnel, the truck or property. Avoid overloading the truck with loads which are too heavy or placed on one side. The data plate attached to the truck, or the load diagram are binding for the maximum load capacity. All nameplates and safety signs on the truck should be cleaned regularly to maintain visibility.

The truck must be used, operated and serviced in accordance with the present instructions. All other types of use are beyond its scope of application and may result in damage to personnel, the industrial truck or property.

1.1.2 Mounting of attachments

The mounting or installation of any attachments which will interfere with, or supplement, the functions of the truck is permitted only after written approval by the manufacturer has been obtained. If necessary, the approval of local authorities has to be obtained. Any approval obtained from local authorities does not, however, make the approval by the manufacturer unnecessary.

Check that loads are handled safely before commissioning a truck with attachments. It may be necessary to make adjustments, depending on the type of attachment, e.g. to pressure settings or adjusting stops and operating speeds.

1.1.3 Modification

Unauthorized modification to the truck can result in injury or death.

Can not remove, disable or modify any safeguards or other safety devices.

Exception:Only in the event that the truck manufacturer is no longer in business and there is no successor in the interest to the business, may the user arrange for a modification or alteration to a powered industrial truck, provided, however, that the user

a) arranges for the modification or alteration to be designed, tested and implemented by an engineer(s) expert in industrial trucks and their safety. b)maintains a permanent record of the design, test(s) and implementation of the modification or alteration.

c) approves and makes appropriate changes to the capacity plate(s), decals, tags and operation manual.

d) affixes a permanent and readily visible label to the truck stating the manner in which the truck has been modified or altered, together with the date of the modification or alteration and the name and address of the organization that accomplished those tasks.

1.1.4 Pallet truck handover

To avoid the inconvenience of making a claim after use, check the forklift truck is in perfect condition and repair, and confirm your satisfaction with the vehicle on the manufacturer's product qualification certificate upon handover.

1.2 Definition of responsible persons

1.2.1 Drivers/Operator

This truck may only be driven by suitable persons who are at least 18 years of age, have been trained in driving, have demonstrated their skills in driving and handling loads to the operating company or an authorised representative, and have been specifically instructed to drive the truck. Specific knowledge of the truck to be operated is also required.

The training requirements under §3 of the Health and Safety at Work Act and §9 of the plant safety regulations are deemed to have been satisfied if the driver has been trained in accordance with BGG (General Employers' Liability Insurance Association Act) 925.

Observe the national regulations for your country.

1.2.2 User

A user is a natural person or legal entity responsible for the forklift. The user may operate the forklift themselves or delegate the task of operating the forklift to someone else (e.g., a driver/operator). In specific circumstances, such as leasing, responsibility will be borne by the user according to the effective contract between the owner of the vehicle and the personnel operating the forklift.

1.2.3 Specialist

A qualified person is defined as a service engineer or a person who fulfils the following requirements:

- A completed vocational qualification that demonstrably proves their professional expertise. This proof should consist of a vocational qualification or a similar document.
- Professional experience indicating that the qualified person has gained practical experience of industrial trucks over a proven period during their career During this time, this person has become familiar with a wide range of symptoms that require checks to be carried out, such as based on the results of a hazard assessment or a daily inspection
- Recent professional involvement in the field of the industrial truck test in question and an appropriate further qualification are essential. The qualified person must have experience of carrying out the test in question or of carrying out similar tests.

  Moreover, this person must be aware of the latest technological developments regarding the industrial truck to be tested and the risk being assessed

1.2.4 User rights, duties and rules of behaviour

Everyone operating the forklift has read and understood this manual and has been approved in the relevant forklift operator training. Operate the forklift in a safe manner to avoid endangering the lives and health of the driver and/or others. Adhere to all warnings and instructions in this manual. This manual is available for use by drivers/operators.

1.2.5 Driver rights, duties and rules of behaviour

Complete training before using the forklift. Also, ensure you have a local license to drive a forklift. Always locate the technical specifications for the specific forklift before use. Forklifts may have optional features and enabled/disabled assist systems that you must understand before operation. Adhere to local safety regulations and instructions for safety equipment. Wear safety shoes when using the forklift. Do not walk under raised forks yourself or allow others to do so. Do not use any load support as a step. If the vehicle is damaged or has faults affecting safety or safe use, do not use the vehicle. All repairs must be carried out by properly trained personnel. Report all accidents resulting in personal injury or material damage to management. Check the functionality of the forklift before each use.

1.2.6 Permissable operating conditions

- Average ambient temperature for continuous duty: +25°C;
- Maximum ambient temperature, short term (up to 1h): +40°C;
- Lowest ambient temperature for trucks intended for use in normal indoor conditions:+5°C; Lowest ambient temperature for trucks intended for use in normal outdoor conditions:−20°C;
- Best operating temperature range: 15°C~35°C;
- Charging temperature range: 5°C~40°C,No charging below 0°C.
- The truck's maximum operation altitude is up to 2000m.
- Use in specified rated load.
- Don't use the truck in rainwater.
- Used in specified area as factory, tourist attraction and recreation place.
- Used on the flat ground, that is fixed and owns enough carrying capacity.
- It is prohibited to pass the bulge or cavity as the small wheel diameter may cause truck tipping over.
- Used on the road with good vision and equipment use license.
- Trucks can only be operated in adequately illuminated working areas to avoid injuries. In case of insufficient light, an additional lighting equipment is needed to ensure that the driver can see properly.
- If you must travel on an incline, the gradients should be below A% at full load, or below B% without a load. (For the value of A and B, refer to the gradeability in Performance data)

NOTE

Conditions of operation road surface: the truck should run on solid, flat, level and paved road surfaces (including both running and lifting)

WARNING

Operator must wear helmet, safety shoes and work(protective) clothes, whenever you operate and maintain the truck, handle the consumables etc.

CAUTION

When working environment is not enough light, please add extra lighting of the working area.

NOTE

Special equipment and authorisation are required if the truck is to be constantly used in conditions of extreme temperature or air humidity fluctuations. We recommend with special measures for the truck or buy the truck for cold store. If in doubt, contact the manufacturer's customer service department.

NOTE

Lithium battery charging temperature range: 5~40°C, 0°C below the low-temperature environment under the conditions of large-scale charging will cause damage to the battery; Discharge temperature range: -20°C~55°C, low temperature (-20°C~0°C) discharge capacity than at room temperature may be reduced compared to normal, it is normal; battery can be 40°C~55°C Ambient temperature, but the battery ambient temperature is too high, especially in the long-term high temperature battery environment, will accelerate the aging of the battery material, shorten the battery life, it is not recommended for long-term use at this temperature. Ambient temperature exceeding the above range of charge and discharge temperature may adversely affect the battery performance or damage, may greatly shorten the battery life, it should be avoided at the above temperature.

1.2.7 Wind loads

Wind forces can affect the stability of a truck when lifting, lowering and transporting loads with large surface areas.

Light loads must be especially secured when they are subjected to wind forces. This will prevent the load from sliding or falling.

Stop the truck in both cases.

1.2.8 Intended use

The lift truck is designed for transporting and stacking the loads stated in the nameplate.

In particular we refer to:

- the safety rules of your trade association.
- In accordance with the special provisions for driving on public roads specified by national specifications.
- Other local regulations.

The rules for the intended and approved use of industrial trucks must be followed under all circumstances by the responsible persons, especially by the operator and service personnel.

The user, and not EP, is responsible for any danger arising from applications not authorised by the manufacturer.

If you want to use the truck for applications not mentioned in this manual, please first contact your authorised dealer.

No changes, particularly no modifications and additions, may be made to the truck without the approval of the manufacturer.

1.2.9 Impermissible use

Avoid the use of the truck by non-working personnel.

Don’t ride on the truck.

Don’t carry or lift people by the truck.

Don’t use the truck on slippery road surfaces.

(such as road surfaces with oil stain or residual snow or those frozen ones)

Don’t carry goods on steep slope to prevent goods from sliding off.

Don’t leave the truck before it is parked as regulated.

Don’t use the truck when any non-working personnel is in the dangerous area.

Don’t be distracted when using the truck.

Don’t be distracted when using the truck.

Don’t place any part of your body in any moving part of the truck to avoid being clamped.

2 Truck description

2.1 Truck overview

2.1.1 Truck components

F4

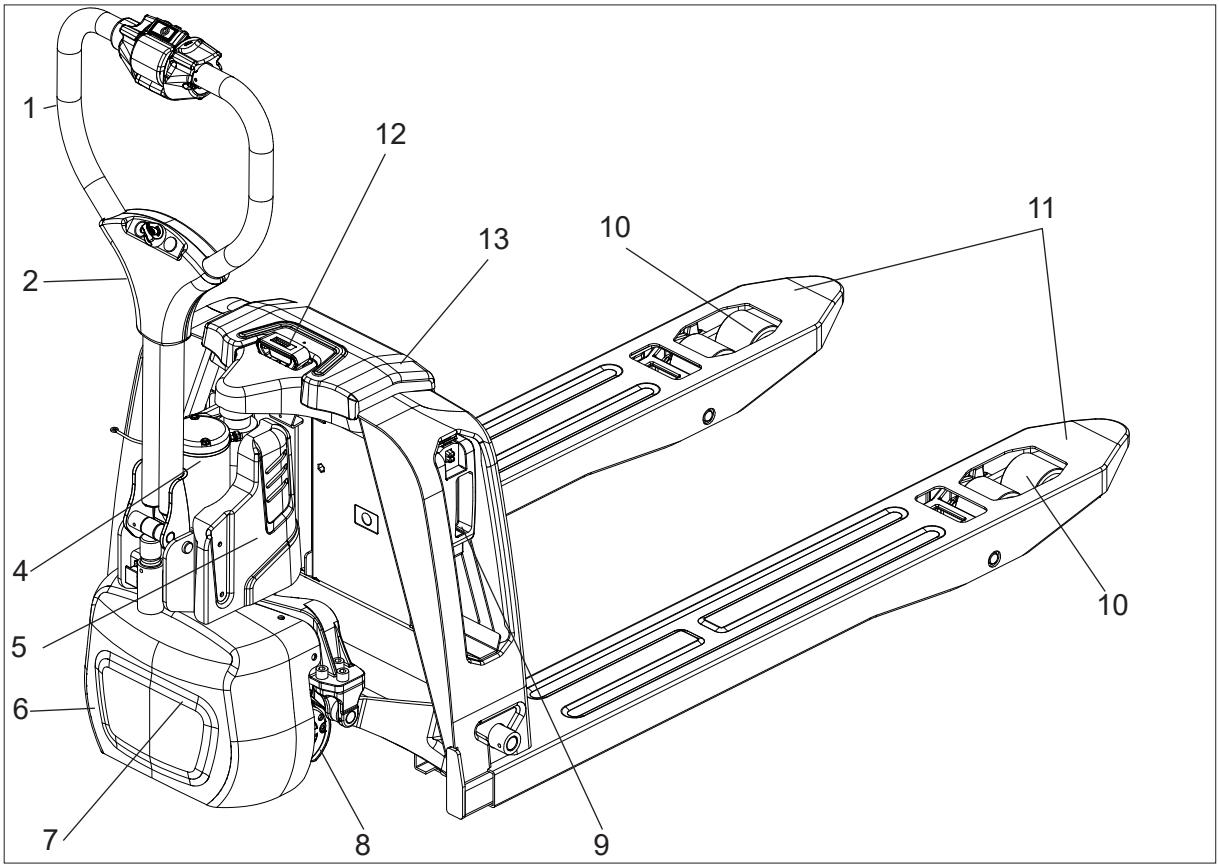

1	Control handle	8	Driving wheel
2	Control handle cover	9	Lithium-ion battery
3	Document boxes	10	Load wheels
4	Hydraulic unit	11	Forks
5	Hydraulic cover	12	Supply plug and display instrument
6	Driving hood	13	Upper cover
7	Controller		

F3

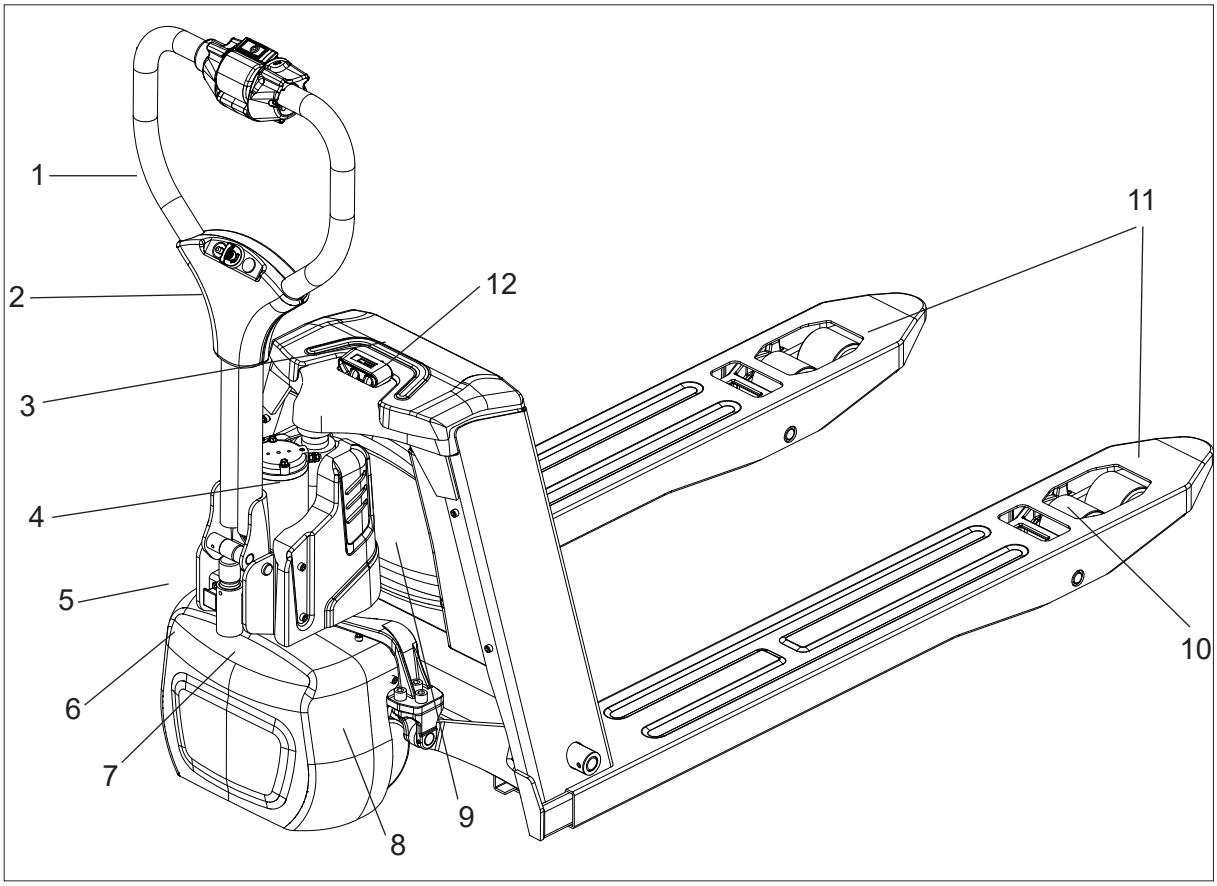

1	Control handle	8	Driving wheel
2	Control handle cover	9	Lithium-ion battery
3	Upper cover	10	Load wheels
4	Hydraulic unit	11	Fork arms
5	Caster(option)	12	Supply plug and display instrument
6	Driving hood		
7	Controller		

F2

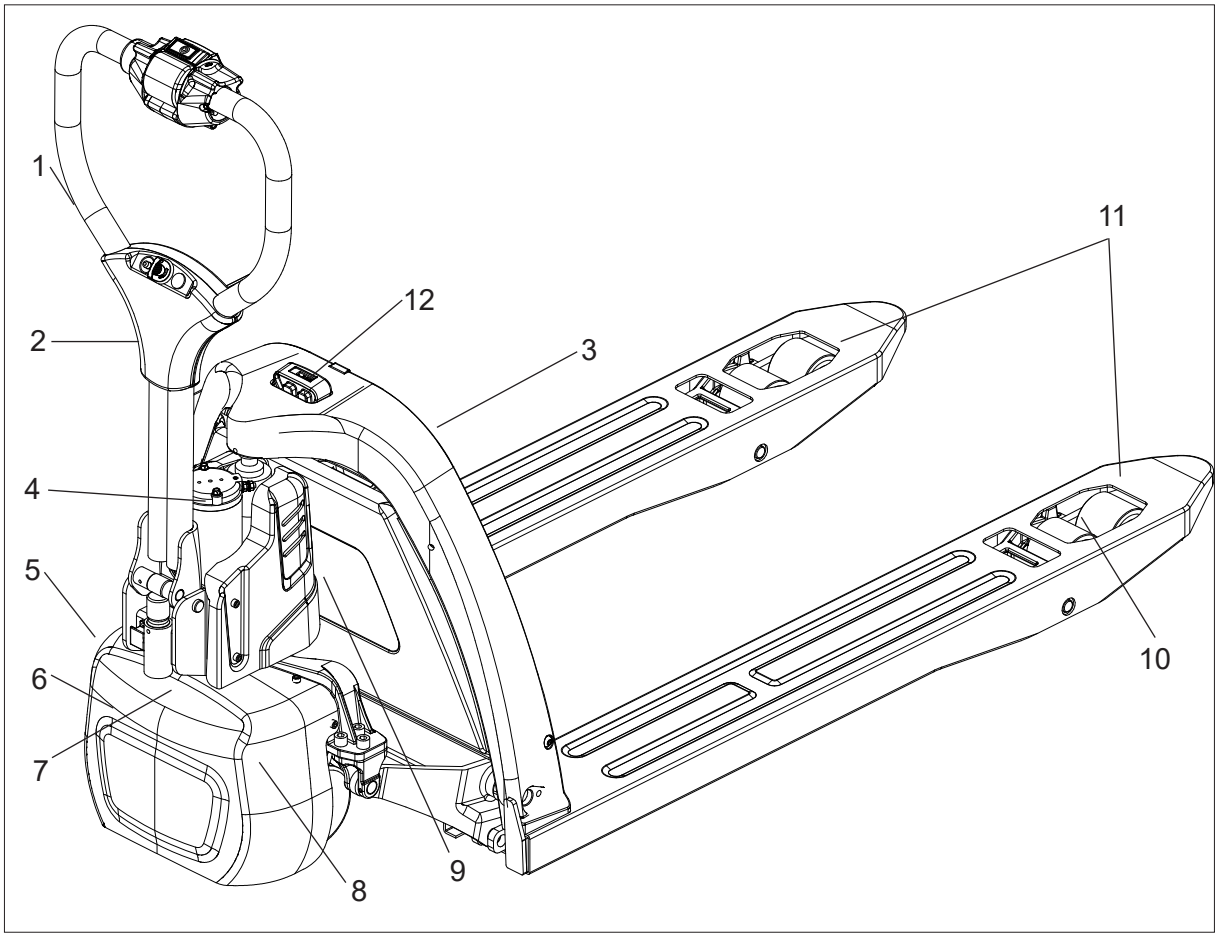

1	Control handle	8	Driving wheel
2	Control handle cover	9	Lithium-ion battery
3	Side cover	10	Load wheels
4	Hydraulic unit	11	Fork arms
5	Caster	12	Supply plug and display instrument
6	Driving hood		
7	Controller		

2.1.2 Function Description

These product has a compact chassis, balanced tiller and a microprocessor electronic control system.The machine is lightweight, highly efficient and easy to handle.

➢ **Design**

The latest ergonomic and practical design, adaptable to all operators and working conditions.

➢ **Tiller**

The tiller is used for smooth steering and control of drive speed, lifting and lowering, braking and the horn without changing the position of the hand. The long tiller shaft allows effortless steering and a safe distance to the truck. A gas spring returns the tiller always into a vertical position that activates the brake automatically.

➢ **Driving**

The electronic control unit ensures comfortable use and lower costs.

Precise control of driving speed.

Jolt-free starting and smooth acceleration to maximum speed.

Simply release or turn the drive direction switch to brake.

Booster circuit prevents the truck rolling back when starting on a gradient.

➢ **Hydraulics**

Gear pump driven by fully enclosed air-cooled motor.

Safety valve and lowering brake protect the hydraulic system.

Pressing the lifting button starts the pump unit, supplying hydraulic oil from the oil reservoir to the lift cylinder. Pressing the lifting button raises the load handler at a constant speed; pressing the lowering button lowers the load handler.

➢ **Brake system**

The truck will be stopped by a regenerative service brake and hold by an automatic electromagnetic parking brake in it's parking position.

➢ **Electrical system**

The truck has an electronic traction controller. 24V lithium-ion battery battery, efficient work, easy to change.

➢ **Lifting system**

The load is lifted by a hydraulic cylinder that activates a lifting shaft that transmits the lifting movement by a push-rod to the load wheels.

2.1.3 Standard Version Specifications

Technical specification details in accordance with VDI 2198. Technical modifications and additions reserved.

➢ Performance data for standard trucks

Distinguishing mark				
1.1	Manufacturer			EP
1.2	Model designation			F2/F3/F4
1.3	Drive unit			Battery
1.4	Operator type			Pedestrian
1.5	rated capacity	Q	kg	1500
1.6	Load center distance	c	mm	600
1.8	Load distance	x	mm	950
1.9	Wheelbase	y	mm	1180
Weight				
2.1	Service weight (include battery)		kg	120
2.2	Axle loading, laden driving side/loading side		kg	480/1140
2.3	Axle loading, unladen driving side/loading side		kg	90/30
Types,Chassis				
3.1	"Tyre type driving wheels/loading wheels"			PU/PU
3.2.1	Tyre size, driving wheels(diameter×width)		mm	Φ210x70
3.3.1	Tyre size, loading wheels(diameter×width)		mm	Φ80x60 (Φ74x88)
3.4	Tyre size, caster wheels(diameter×width)		mm	/
3.5	Wheels, number driving, caster/loading (x=drive wheels)		mm	1x,2/4 (1x,2/2)
3.6	Track width, front,driving side	b10	mm	/
3.7	Track width,rear,loading side	b11	mm	410/ (535)

Dimensions				
4.4	Lift height	h3	mm	105
4.9	Height drawbar in driving position min./max.	h14	mm	750/1190
4.15	Lowered height	h13	mm	82
4.19	Overall length	l1	mm	1550
4.20	Length to face of forks	l2	mm	325
4.21	Overall width	b1/ b2	mm	695(590)
4.22	Fork dimensions	s/ e/ l	mm	55x150x1150
4.25	Distance between fork-arms	b5	mm	560(685)
4.32	Ground clearance, center of wheelbase	m2	mm	25
4.34.1	Aisle width for pallets 1000 × 1200 crossways	Ast	mm	2160
4.34.2	Aisle width for pallets 800 × 1200 lengthways	Ast	mm	2025
4.35	Turning radius	Wa	mm	1360
Performance data				
5.1	Travel speed, laden/ unladen	km/ h	km/h	4/4.5
5.2	Lifting speed, laden/ unladen		m/ s	0.017/0.020
5.3	Lowering speed, laden/ unladen		m/ s	0.046/0.058
5.8	Max. gradeability, laden/unladen		%	5\16
5.10	Service brake type			Electromagnetic
Electric-engine				
6.1	Drive motor rating S2 60 min		kW	0.75
6.2	Lift motor rating at S3 15%		kW	0.5
6.4	Battery voltage/nominal capacity K5		V/ Ah	24/20
6.5	Battery weight		kg	5
Addition data				
8.1	Type of drive control			DC
10.5	Steering type			mechanical
10.7	Sound pressure level at the driver’s ear		dB (A)	<74

a=200mm

2.1.4 Dimensions

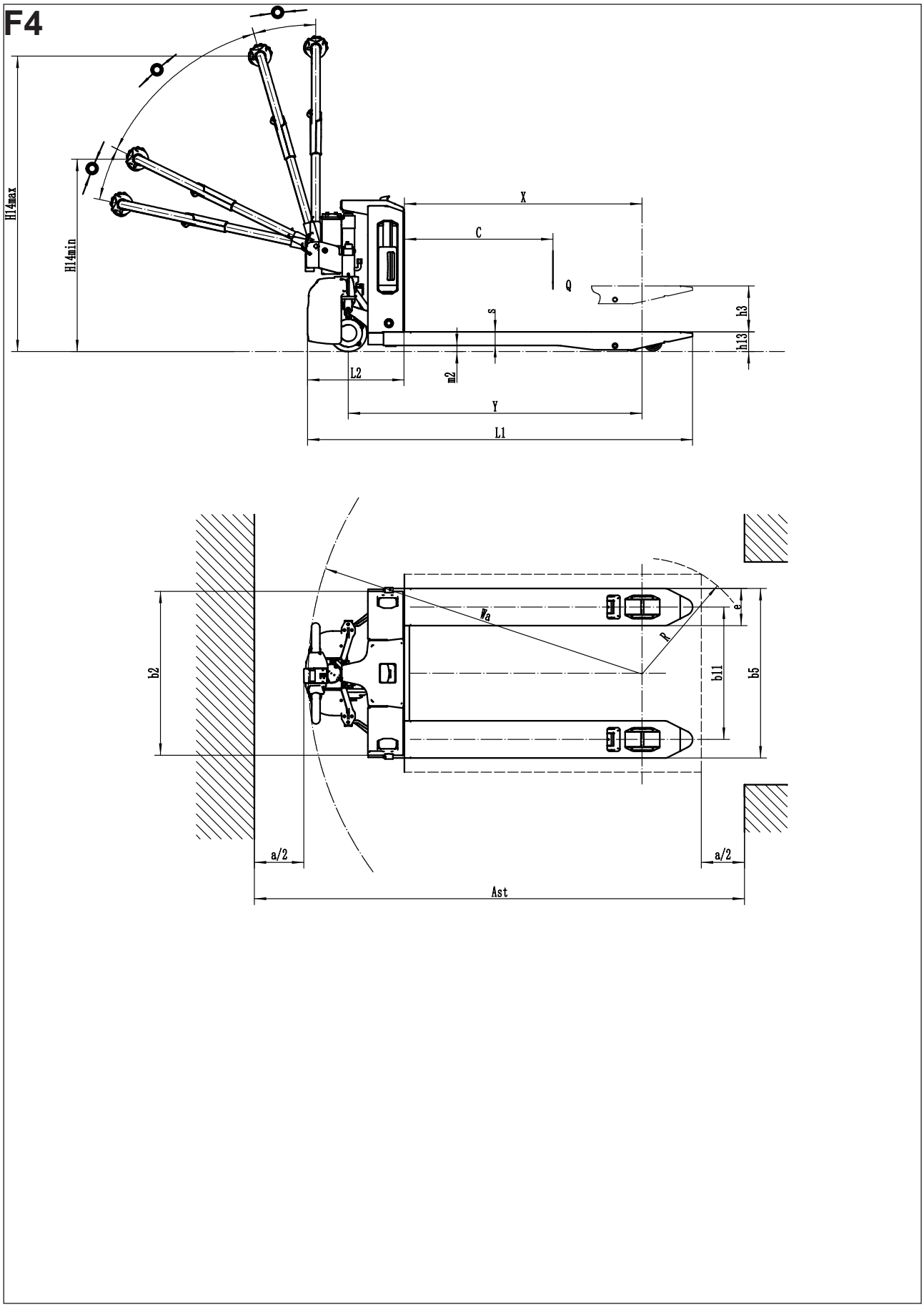

F3

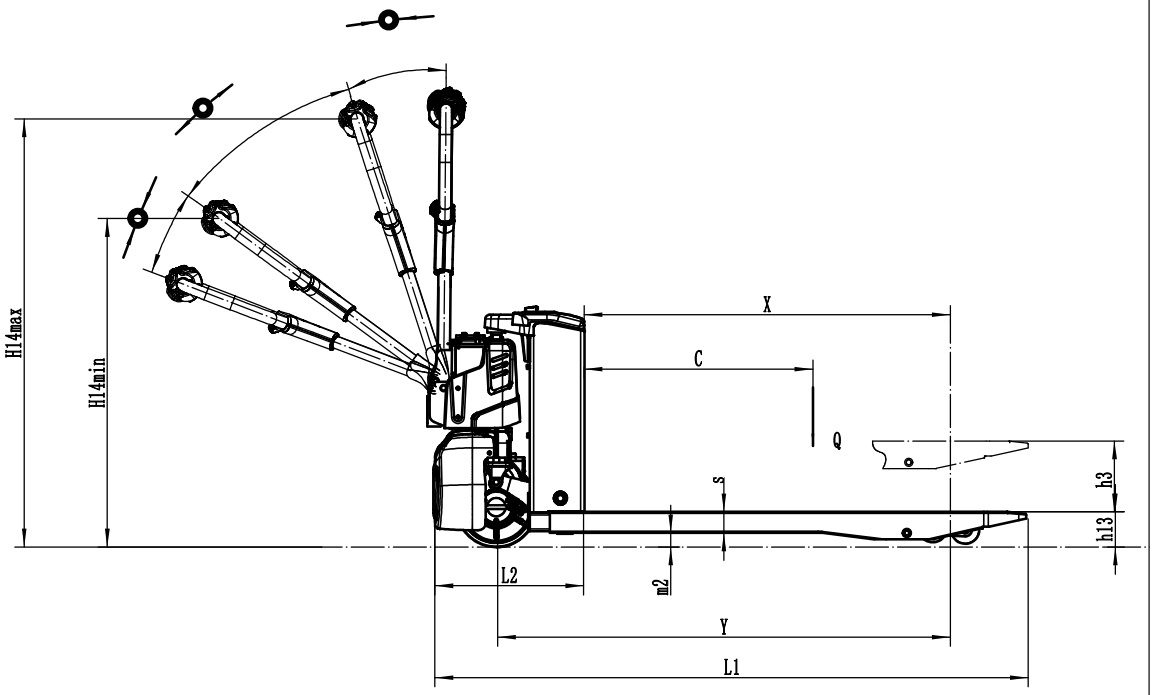

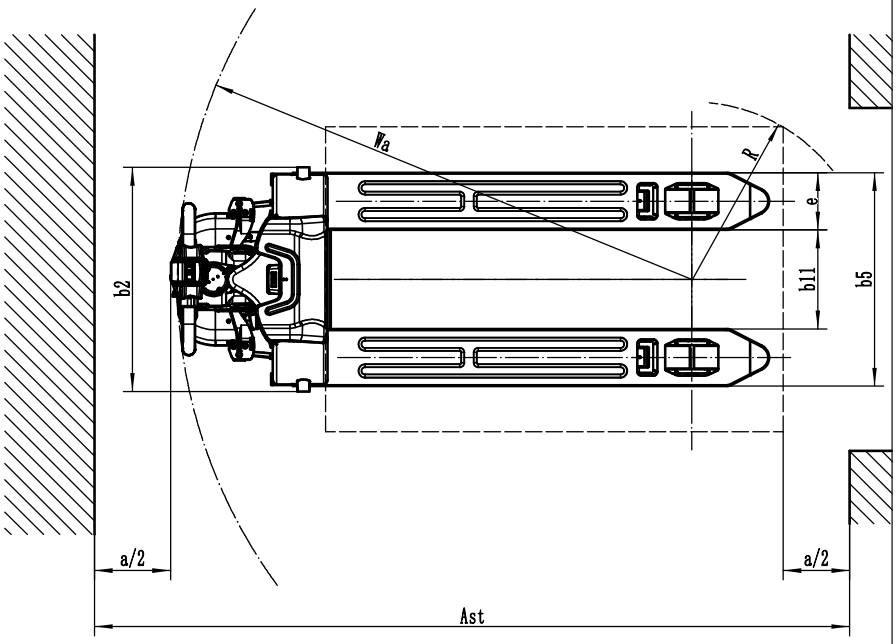

F2

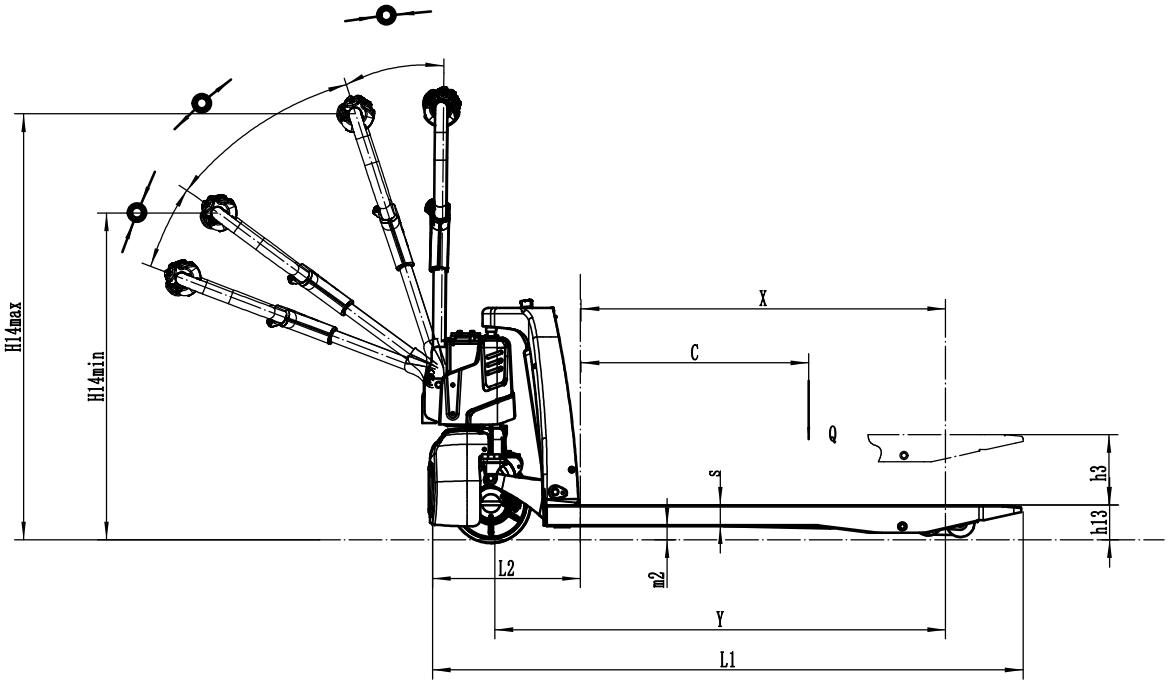

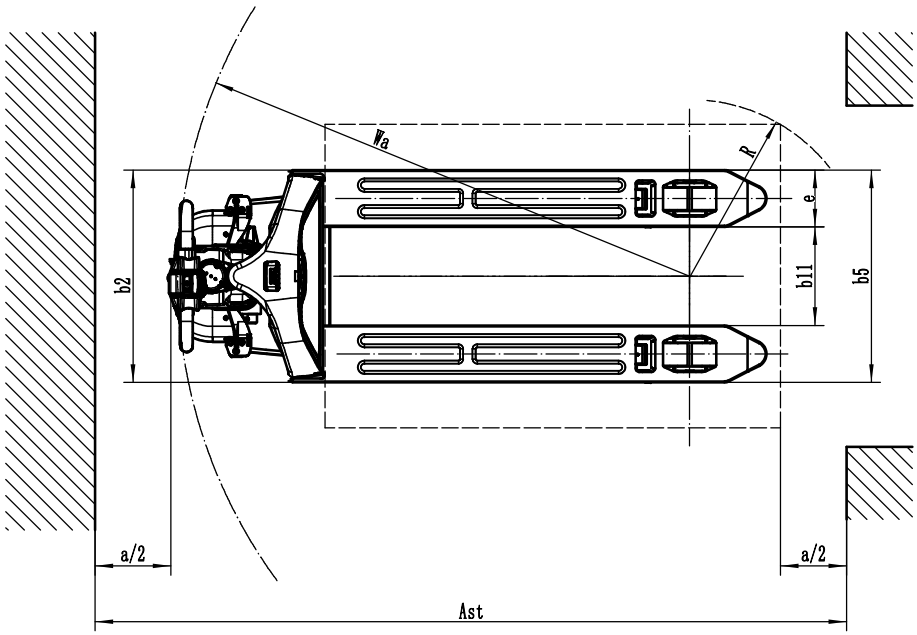

2.1.5 Identification points

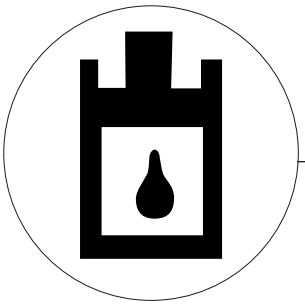

Item	Description
1	Hydraulic oil port
2	Do not rest on the pallet truck label
3	Anti-pinch hand label
4	Read operation manual label

2.1.6 Truck data plate

Item	Description
2	MODEL TYPE
3	SERIAL NO.
4	MANUFACTURE DATE
5	LIFT HEIGHT
8	BATTERY VOLTAGE
9	RATED DRIVE POWER
10	MAX BATTERY WEIGHT
11	MIN BATTERY WEIGHT
12	RATED CAPACITY
13	LOAD CENTER
14	UNLADEN MASS WITHOUT BATTERY
15	UNLADEN MASS WITH BATTERY

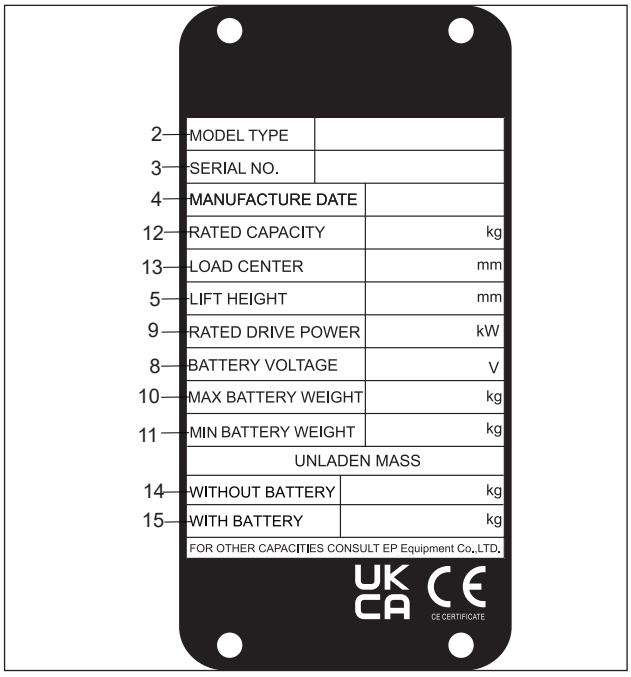

2.2 Display and Controls

2.2.1 Tiller

➢ **F4**

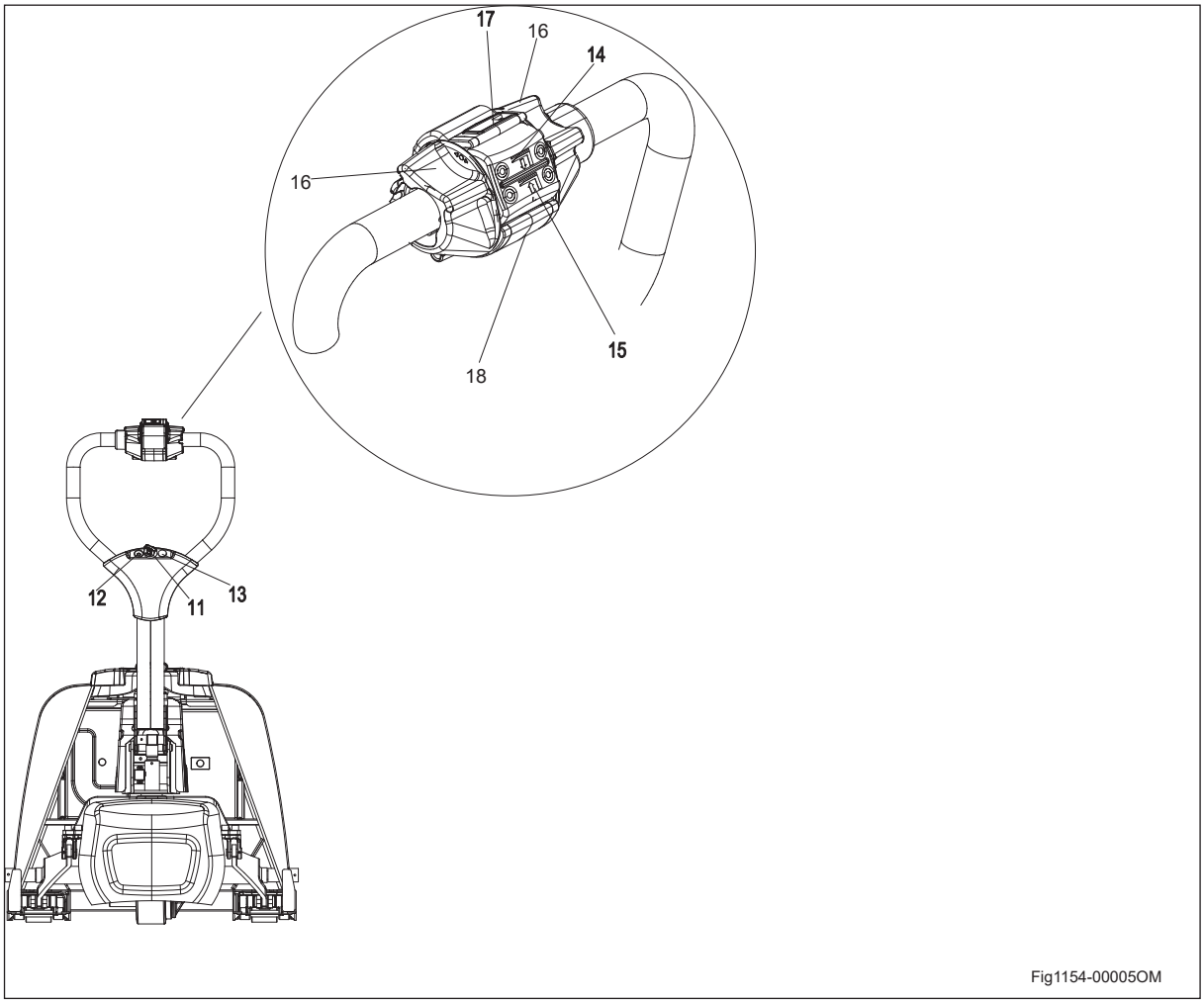

11	Key switch	Connect and interrupt control current.
12	Fault indicating lamp	Remain red light lit under normal, flashing show the failure state of truck.Shows the error state of the truck (see the Service Manual error code)
13	Creep speed switch	Keeping the handle in the vertical position, simultaneously press creep speed switch and drive switch, the truck will move at a low speed.
14	Lift button	Raises the load device. When the battery is consumed about 85%, lifting function will be locked.
15	Lower button	Lowers the load device.
16	Drive switch	Controls travel direction and speed
17	Horn button	Send out sound warning signals.
18	Emergency reverse switch	By pressing this switch, the vehicle starts to travel in the opposite direction.

➢ F2,F3

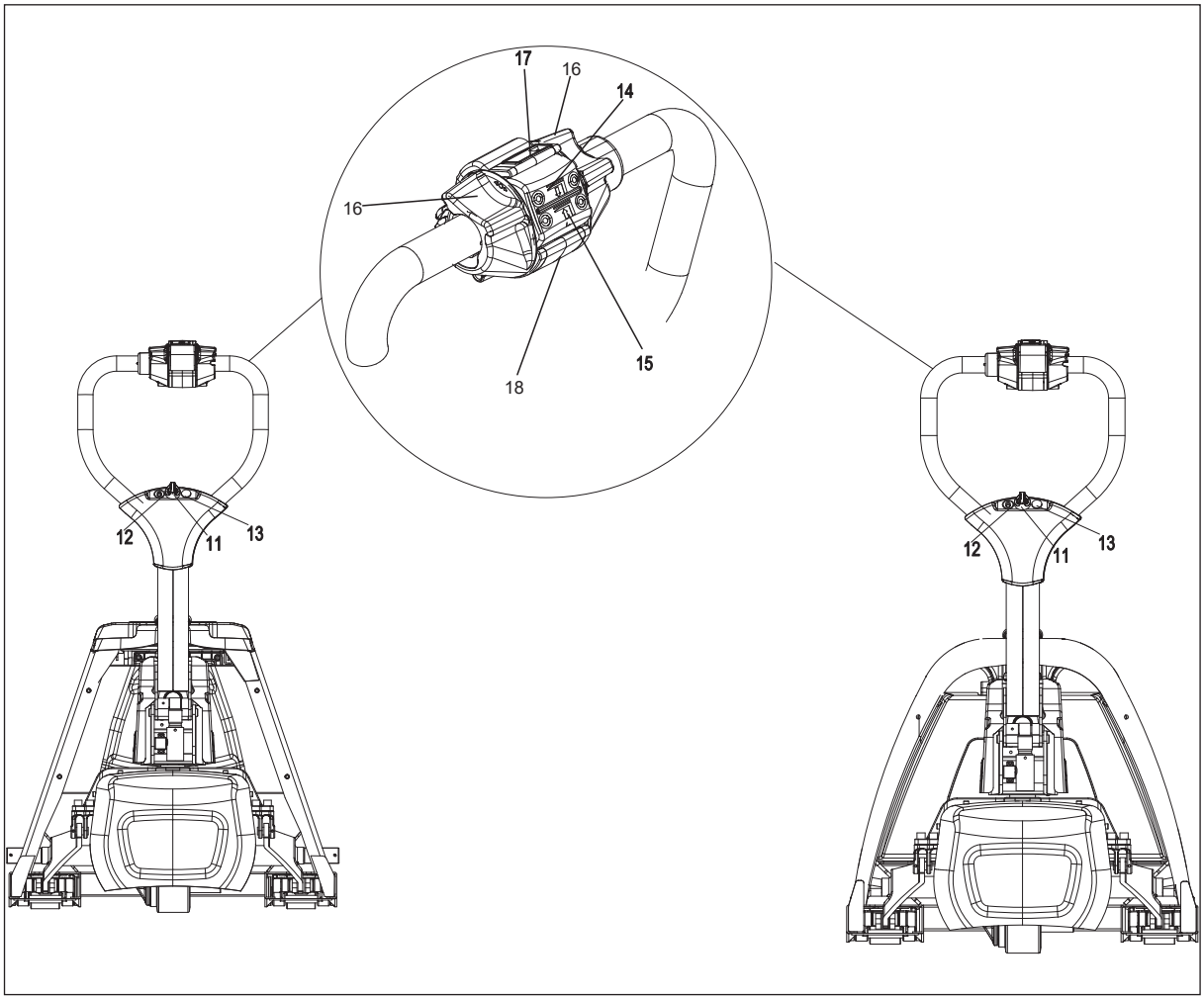

11	Key switch	Connect and interrupt control current.
12	Fault indicating lamp	Remain red light lit under normal, flashing show the failure state of truck.Shows the error state of the truck (see the Service Manual error code)
13	Creep speed switch	Keeping the handle in the vertical position, simultaneously press creep speed switch and drive switch, the truck will move at a low speed.
14	Lift button	Raises the load device. When the battery is consumed about 85%, lifting function will be locked.
15	Lower button	Lowers the load device.
16	Drive switch	Controls travel direction and speed
17	Horn button	Send out sound warning signals.
18	Emergency reverse switch	By pressing this switch, the vehicle starts to travel in the opposite direction.

2.2.2 Key switch

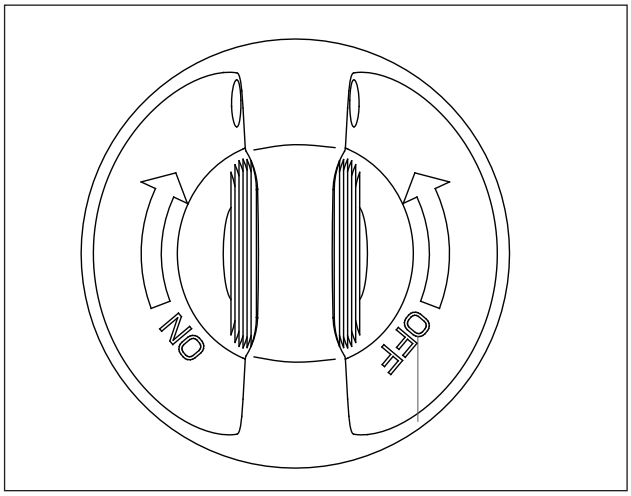

Connect and interrupt control current.

- When the key rotates to gear “OFF”, the control current of the truck will be interrupted;
- When the key rotates to gear “ON”, the control current of the truck will be connected.

NOTE

Pulling out the key switch of a truck before leaving can prevent the forklift from starting accidentally.

2.2.3 Battery charge indicator

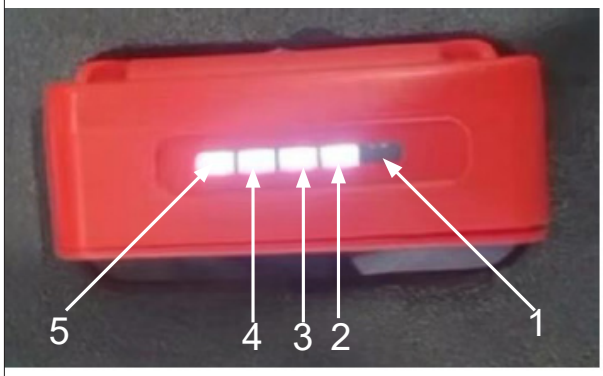

Fig1154-00002OM

After powering on, the five LED lights flash once before entering the battery level display phase. When the battery level is below 15%, D5 light flashes, indicating the need to charge the truck. When the battery level is between 15% and 20%, D5 light remains on. For battery levels between 20% and 40%, D4 and D5 lights remain on. Battery levels between 40% and 60% result in D3, D4, and D5 lights remaining on. When the battery level is between 60% and 80%, D2, D3, D4, and D5 lights remain on. For battery levels above 80%, all lights remain on.

WARNING

When the residual light indicator (5) is flashing, the truck will be power off.you need to charge the truck immediately.

NOTE

- *Only in the static state of F series can the battery capacity be accurately observed via five indicator lights .*
- *It is normal that the light indicator will still be on when the key switch is turned off and the supply plug is not pulled out.*
- *If the truck is out of power, you need to wait for 5-10 minutes until the battery power is restored before moving the car and charging it immediately.*

2.3 Related Safety Instruction and Standard (For CE)

2.3.1 Electrical requirements

The manufacturer certifies compliance with the requirements for the design and manufacture of electrical equipment, according to EN 1175 "Industrial Truck Safety - Electrical Requirements", provided the truck is used according to its purpose.

2.3.2 Vibrations

Vibrations to which the hands and arms are exposed

The following value is valid for all truck models:

Specified characteristics for upper limb vibrationspecified characteristics for upper limb vibrations	
vibration characteristics	< 2.5 m/s2

NOTE

It is mandatory to specify the hand-arm vibrations, even where the values do not indicate any danger, as in this case.

⚠ CAUTION

The value expressed above can be used to compare forklift trucks of the same category. It cannot be used to determine the operator's daily exposure to vibrations during real operation of the truck; these vibrations depend on the conditions of use (floor conditions, method of use etc.) and therefore daily exposure must be calculated using data from the place of use.

2.3.3 Continuous sound level

< 74 dB(A)

according to EN 12053 as stipulated in ISO 4871

The continuous sound level is a value averaged according to standard regulations, taking the sound pressure level into account when driving, lifting and idling. The sound pressure level is measured at the ear.

2.3.4 Electromagnetic compatibility (EMC)

Electromagnetic compatibility (EMC) is a key quality feature of the truck.

EMC involves

- limiting the emission of electromagnetic interference to a level that ensures the trouble free operation of other equipment in the environment.
- ensuring sufficient resistance to external electromagnetic interference so as to guarantee proper operation at the planned usage location under the electromagnetic interference conditions to be expected there .

An EMC test thus firstly measures the electromagnetic interference emitted by the truck and secondly checks it for sufficient resistance to electromagnetic interference with reference to the planned usage location . A number of electrical measures are taken to ensure the electromagnetic compatibility of the truck .

3 Safety

3.1 Safety Instructions

- Only trained and authorized operator shall be permitted to operate the truck.
- Operator must wear helmet, working shoes and uniform
- Do wash the inner of the truck, do not place the truck outdoors and exposed to the rain.
- Fire extinguisher shall be equipped at the work site. Users can choose truck equipped with fire extinguisher. Driver and manger should be familiar with the fire extinguisher position and application method.
- Whenever you find the forklift abnormal, stop the truck, put on the DANGEROUS or FAULT sign to the truck, remove the key, and report to the managing person. Only after eliminating the fault can you use the truck.
- The controller equips with energy accumulator, do not touch between B+ and B- to avoid electric injury. If you need check or clean the controller, connect load(like contactor coil or horn or bulb or resistance) between controller B+ and B- to discharge the controller capacity.
- Only trained and authorized operator shall be permitted to operate the truck.
- Do not use truck under the weather of sand, snow, thunder, storm, typhoon, etc. Avoid using the truck when the wind speed is larger than 5m/s.
- Cause the wheels of pallet truck is small, it is not allowed to run on the street, and only for driving in specified stacking place.
- When handling bulky loads, which restrict your vision, please operate the machine in reverse or have a guide.
- Do not drive the truck when the forks in high position.
- Goods are not allowed to deviate the fork center, when goods is deviating the fork center, turn or pass uneven road, you are easily to fall. Meanwhile, possibility of turnover will increase.
- Wipe off the oil, grease or water on the soleplate, foot pedal and control lever.

3.2 Safety regulations for the operation of truck

Driver Authorization:

The truck may only be used by trained personnel who have demonstrated that they can drive, handle loads, and are authorized to operate the truck.

Unauthorized Use of Truck

The driver is responsible for the truck during the time it is in use and should prevent unauthorized persons from driving or operating the truck. Do not carry passengers or lift personnel.

Damage and Faults

The supervisor must be immediately informed of any damage or faults to the truck. If the truck is not safe for operation (e.g., wheel or brake problems) it must not be used until it has been repaired.

Repairs

The driver must not perform any repairs or alterations to the truck. Repairs must only be done by an authorized, trained technician. The driver must never disable or adjust safety mechanisms or switches.

Hazardous Area

A hazardous area is defined as the area in which a person is at risk due to truck movement,

lifting operations, the load handler (e.g., forks or attachments) or the load itself. This also includes areas which can be reached by falling loads or lowering operating equipment.

- Unauthorized persons must be kept away from the hazardous area.
- When there is danger to personnel, a warning (horn) must be sounded with sufficient notice.
- If unauthorized personnel are still within the hazardous area the truck shall be brought to a halt immediately.
- This unit is intended to be driven in clean, dry, flat surfaces in non-freezer or refrigerated environments.

Safety devices and warning signs

The safety devices, warning signs and warning instructions in the present operating instructions must be strictly observed.

Travel routes and work areas:

Only use lanes and routes specifically designated for truck traffic. Unauthorized parties must stay away from work areas. Loads must only be stored in places specially designated for this purpose.

Nature of loads to be carried

The operator must make sure that the load is in a satisfactory condition. Only carry loads that are positioned safely and securely. Use suitable precautions to prevent parts of the load from tipping.

Before operation

Before using the truck, inspect the work area. It should be neat, well lit, adequately ventilated, and free from hazardous material. Aisles and roadways should be unobstructed and well marked. Operators must know the classification for the truck and use the truck only in permissible areas.

Never operate the truck with greasy hands. This will make the controls slippery and result in loss of truck control.

Operating position

The truck may be operated in either direction while walking. When operating in reverse(forks leading direction, always keep both hands on the tiller. When operating in forks-trailing direction keep one hand on the controls and, if possible, walk ahead and to the side of the truck.

During operation, always grasp the handle at the travel control. Keep fingers within the protected area of the handle at all times. Operators must not ride the truck unless it is designed for riding. The operator position for operating the truck within the operating area B.

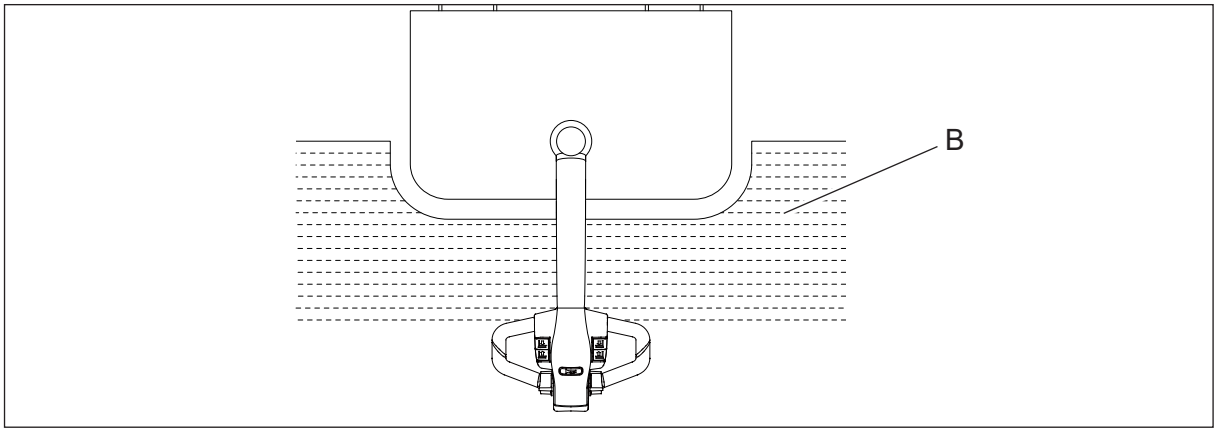

⚠ WARNING

Injury to hands can occur if the handle is grasped incorrectly. Keep hands and fingers within the protected area of the handle.

If any part of your body is outside the operating areaB, there is a risk of crushing.

Ensure that your entire body is within the area when operating the forklift.

Travel

The truck is designed for operation on smooth, dry surfaces such as warehouse and factory floors, loading docks or paved areas. Under all travel conditions operate the truck at a speed that will permit it to be brought to a stop in a safe manner. Avoid running over loose objects on the roadway surface.

⚠ WARNING

Loss of control!

Do not travel at excessive speeds; keep your truck under control at all times.

Always watch for pedestrians.

Unstable loads are hazardous. Ensure all loads are secure and evenly positioned across both forks. Never lift a load with only one fork. Never carry anything on any part of the truck except the forks unless a specific area has been provided by the manufacturer. Never overtake another truck at an intersection, blind spot or other dangerous location. Use the horn at intersections and any location where visibility is limited.

Inclines, Ramps, Docks, Elevators If you must travel on an incline, do so with caution. Do not operate truck on a wet incline.

Keep the forks upgrade to maintain control when travelling up or down an incline with a loaded truck.Keep the forks downgrade when travelling up or down an incline with an empty truck.

Stability

Stability is guaranteed if your truck is used properly in accordance with its intended purpose. Common reasons for a loss of truck stability include:

- Emergency stops or sharp turns
- Driving with a raised load or a load handling device
- Turning the vehicle around on or driving across a slope
- Driving up or down a slope with the load pointing downhill
- Driving with a wide load
- Carrying a swinging load
- Driving near the edge of a ramp or up steps
- Tilting the mast forward while carrying a raised load
- Driving on uneven surfaces
- Overloading the truck
- Carrying bulky loads in strong winds
- When carrying liquid, its centre of mass inside the container may shift due to inertial force (such as when pulling away, braking or turning)

⚠ DANGER

- *Tip-over will occur if you turn while travelling on a ramp or travel at an angle other than straight up or straight down a ramp.*
- *Never turn on an incline or ramp either loaded or unloaded. Travel straight up or straight down.*
- *Be aware that when descending an incline your stopping distance will be greater than when on a level surface. Reduce your speed, and ensure that there is adequate clear space at the bottom of the ramp to stop and turn.*
- *To avoid hazards associated with a dock, you should personally check that the trailer brakes have been applied, wheel chocks are in place, and that any trailer-to-dock locking systems are being utilized. The impact of moving in and out of a trailer may cause the trailer to creep or move. Confirm that the driver will not move the trailer until you are done.*
- *Do not drive the truck onto an elevator without specific authorization. Verify that the capacity of the elevator exceeds the weight of the truck and the weight of the load. Approach elevators slowly and ensure that the elevator car is level with the floor before entering. Enter elevators squarely with the load end leading. Ensure that no part of the truck or load contacts any part of the elevator other than the floor. Once on the elevator, neutralize the truck controls, shut off the power, and set the brakes. Any other personnel should leave the elevator before the truck is allowed to enter or leave.*

Be especially cautious when driving the truck on ramps or bridge plates. Be sure to maintain a safe distance from each edge. Before driving the truck over a ramp or bridge plate, verify that its position is secured to prevent movement. Never exceed the rated capacity of a ramp or bridge plate.

Battery safety

Remain aware of the following information.

- Wear protective equipment (protective apron and gloves) and protective glasses when working with battery acid. If clothing, skin or eyes come into contact with battery acid, immediately flush the affected areas with water. If acid contacts the eyes, seek medical attention at once. Clean spilled battery acid immediately with large amounts of water.
- Remove any metal rings, bracelets, bands, or other jewelry before working with or near batteries or electrical components.
- Never expose batteries to open flame or sparks.
- Shorting of battery terminals can cause burns, electrical shock, or explosion. Do not allow metal parts to contact the top surface of the battery. Make sure all terminal caps are in place and in good condition.
- Batteries may only be charged, serviced, or changed by properly trained personnel.
- Always follow battery manual provided by the manufacturers of the battery, charger.

4 Operation

4.1 Checks and tasks before daily use

- Damage to the truck or the attachment (variant), non-functional switches or safety systems and modification of predefined set values can lead to unpredictable and dangerous situations.
- The following checks and tasks enable causes of this type to be identified in good time. It is important to run through all the checks and tasks listed in the following table from top to bottom before daily use of the truck.
- If damage or other defects are identified on the truck or the attachment (variant), the truck must not be used until it has been properly repaired.

Operator's Daily Checklist

Date _____ Operator _____

Truck No. _____ No. _____

Department _____

Runtime
Meter Reading _____

Daily Check Items	O.K.(√)	Remark
Check for Fluid Leakage		
Check for scratches, deformation or cracks.		
Check Decal Condition		
Check the battery bottom connector pins		
Check the smooth movement of the wheels.		
Check the function of the emergency brake by activating the emergency disconnect switch.		
Check the control hand Mechanical operating braking function.		
Check the lifting and lowering functions by operating the buttons.		
Check display equipment, alarm system and safety devices.		
Check the vertical creep of the truck.(if equipped)		
Check the chassis frame and apply grease as required. Check the position reset function of the operating handle.		
Visually inspect the battery and recharge the battery(if equipped)		

Operator's Daily Checklist Continued

Date _____ Operator _____

Truck No. _____ No. _____

Department _____

Runtime
Meter Reading _____

Daily Check Items	O.K.(√)	Remark
Visually inspect the bolts and nuts		
Visually inspect if there are any broken hoses or broken electric wires.		
Perform a visual inspection for integrity, deformation,damage with connector pins at the bottom of the battery.		

- Do not use the truck if there is any damage or defect.
- Contact your authorised service centre.

4.2 Using the truck

4.2.1 Commissioning

The truck must only be operated on battery current!

To prepare the truck for operation after delivery or transportation, the following operations must be performed:

- Check the equipment for completeness.
- If necessary, install the battery. Make sure that the battery cable is not damaged.
- Fully charge the battery.
- Check for Fluid Leakage.
- Check the brake function.
- Check the lifting and lowering function.
- Check the driving function.
- Check the steering function.

The truck can now be started, see Page 29 Section "4.2.5 Truck starting".

⚠ WARNING

The truck must only be operated with a lithium-ion battery.

NOTE

If the truck is delivered in multiple parts, setup and commissioning must only be performed by trained, authorised personnel.

Wheel flattening

If the truck has been parked for a long period, the wheel surfaces may tend to flatten. This flattening has a negative effect on the safety and stability of the truck.

Once the truck has covered a certain distance, the flattening will disappear.

4.2.2 Environmental considerations

Packaging

During delivery of the truck, certain parts are packaged to provide protection during transport. This packaging must be removed completely prior to initial start-up.

NOTE

The packaging material must be disposed of properly after delivery of the truck.

4.2.3 During running-in

We recommended operating the machine under light load conditions for the first stage of operation to get the most from it. Especially the requirements given below should be observed while the machine is in a stage of 100 hours of operation.

Must prevent the new battery from over discharging when early used. Please charge when remain power is less than 20%.

Perform specified preventive maintenance services carefully and completely.

Avoid sudden stop, starts or turns.

Oil changes and lubrication are recommended to do earlier than specified.

Carry only 70-80% of the rated load.

4.2.4 Defining directions

The drive directions of the truck are forward (1) and reverse (2).

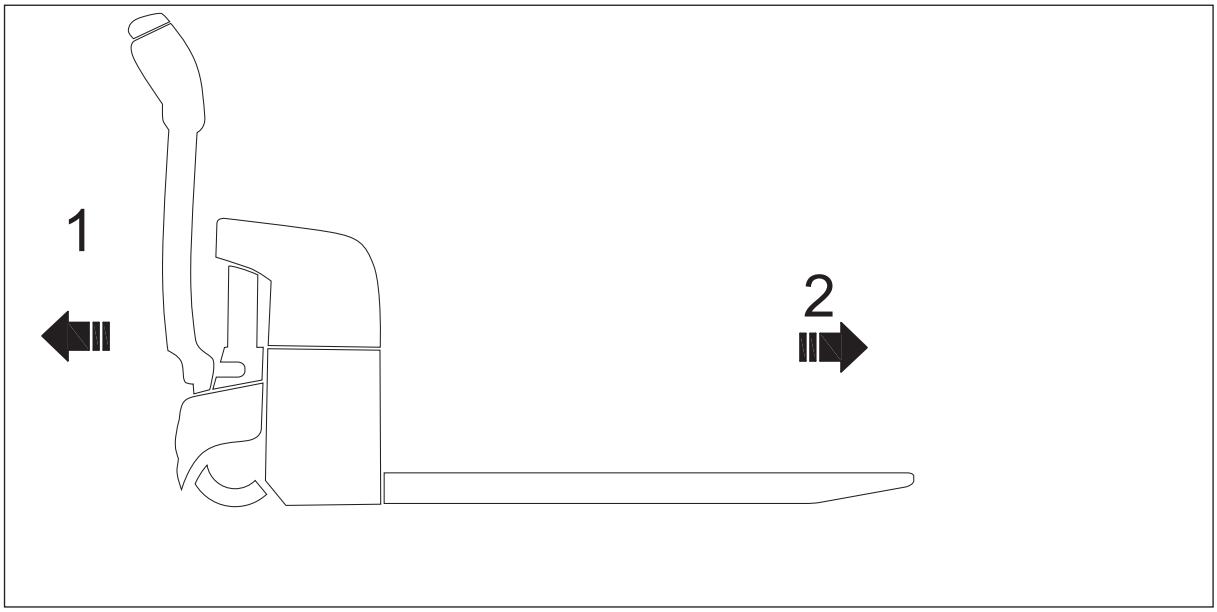

4.2.5 Truck starting

Carry out check before operation and make sure each function and state is normal (see Page 27 Section "4.2.1 Commissioning").

Before start, press the horn button (4) for F2/F3 and make sure no people around.

a.Engaged the supply plug (1);

b.Open the key switch (2) to start the truck.

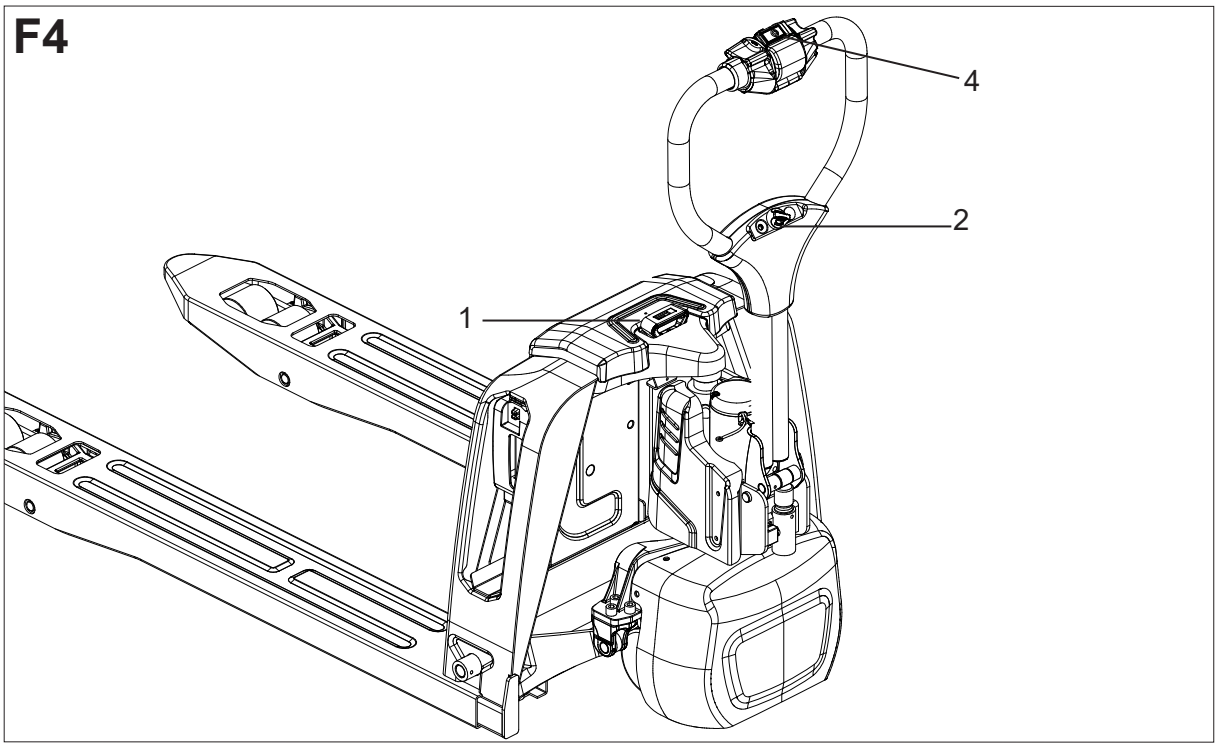

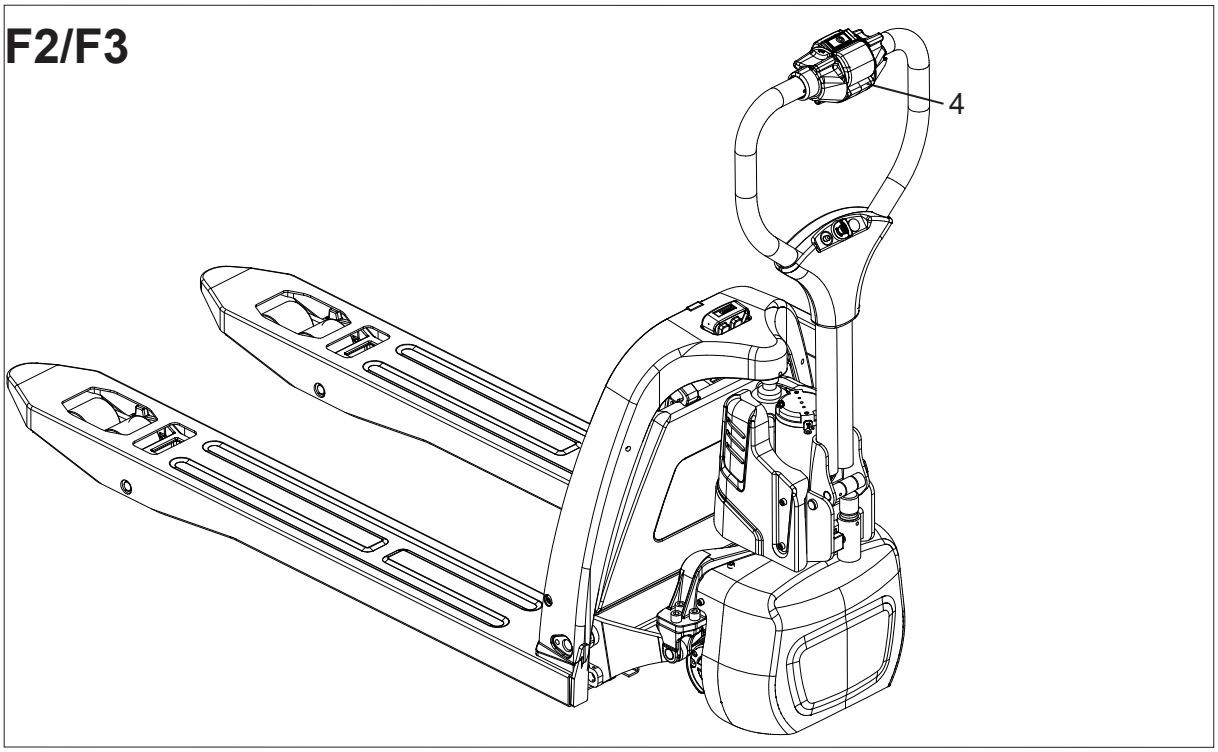

4.2.6 Running

Set the control lever to the running area (M) ,Set the drive switch (1) to the required direction (F for Forward, R for Reverse). Control the travel speed with the drive switch (1) (the lager the turning angle, the faster corresponding speed)

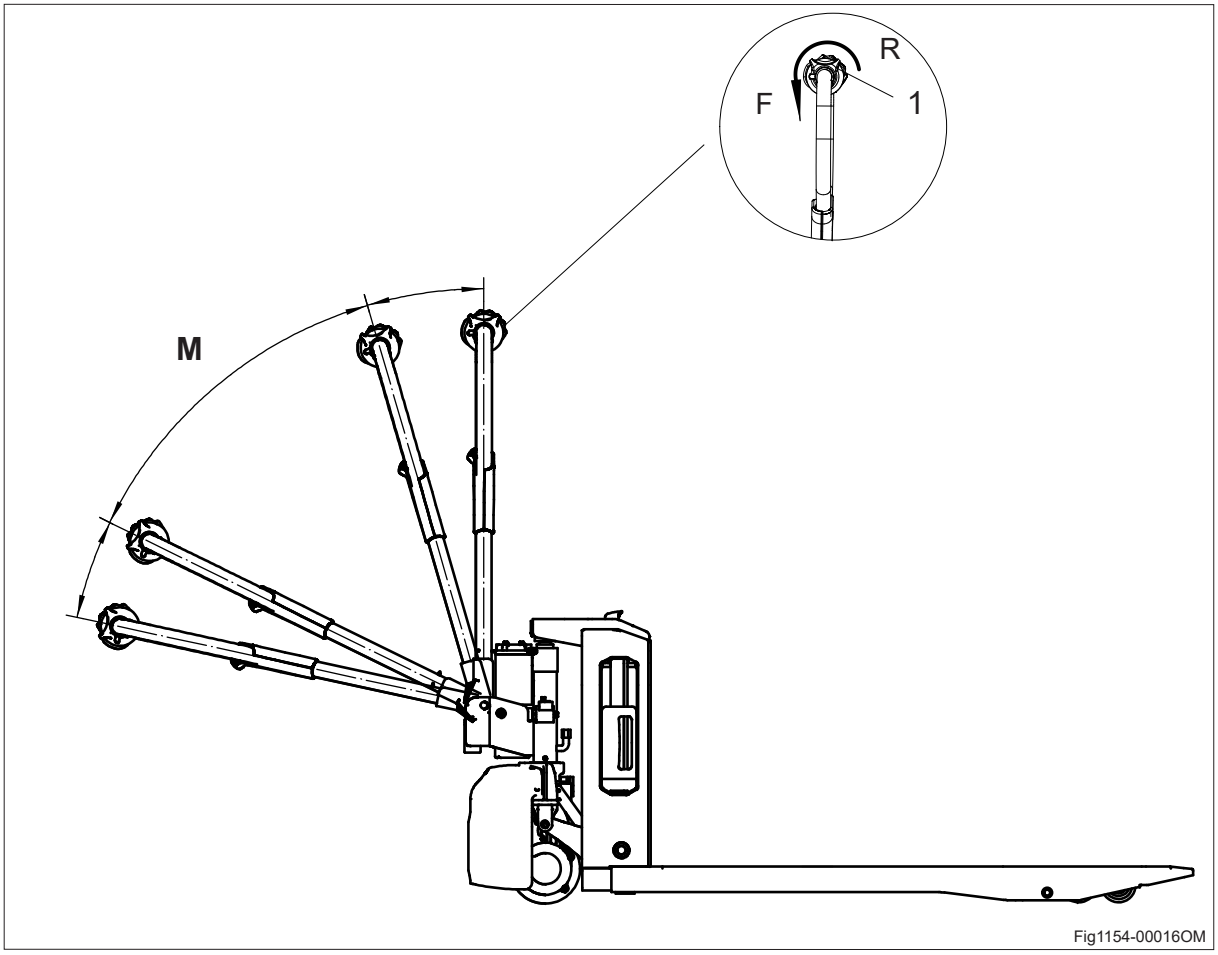

Fig1154-00016OM

NOTE

When using the truck on a ramp or a uneven road, please lift the forks of the truck to prevent its bottom from colliding with the road surface.

Driver should walk in front of the truck and keep at the side front of the truck when travelling. One hand holds the handle, and operates travel switch with thumb. Always watch moving direction and guide the truck. Or hold the handle with both hands and push the truck go forward.

⚠ CAUTION

- *Operator must wear protective boots.*
- *When enter narrow area as lift, first get fork go.*
- *Travel according to regulated route. Keep road clean and no slipping.*

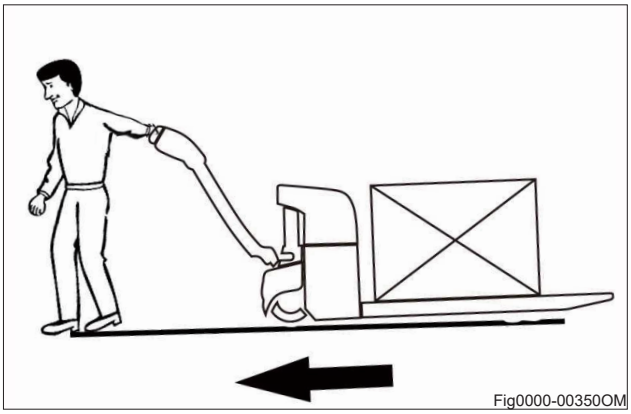
Fig0000-00350OM

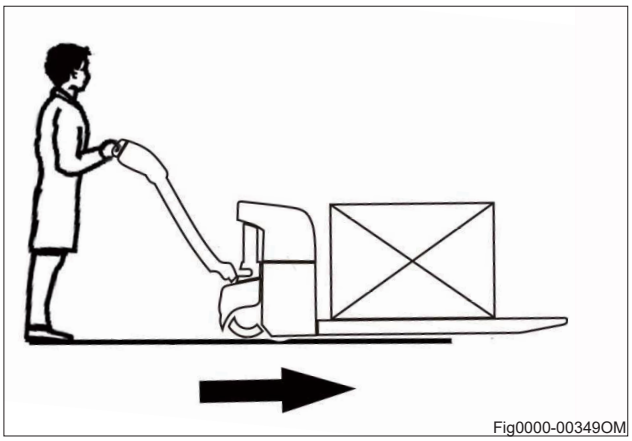
Fig0000-00349OM

➢ **Slow travel**

When you apply the slow travel speed button and Keep the handle in the vertical position, the truck travels at reduced speed and acceleration.

Procedure:

- Keeping the handle in the vertical position, simultaneously press the slow travel speed button (4) and drive switch (2) .the truck will reduce its speed to 20% of the maximum speed.
- The truck can be operated with a control lever (3) (e.g. in congested areas/travel seat).
- Set the drive switch (2) to the required direction (forward or backward).
- The truck travels at slow speed.

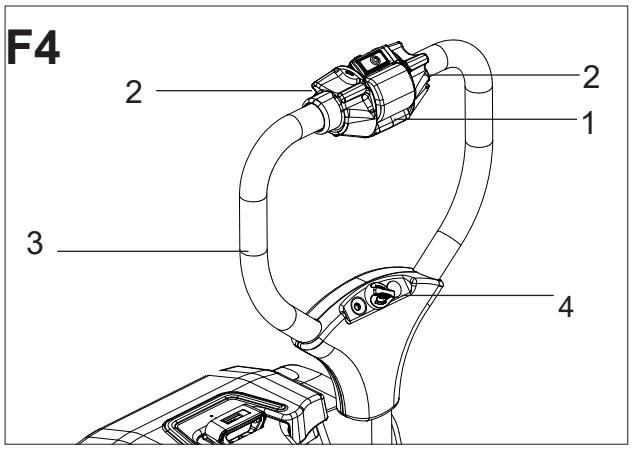

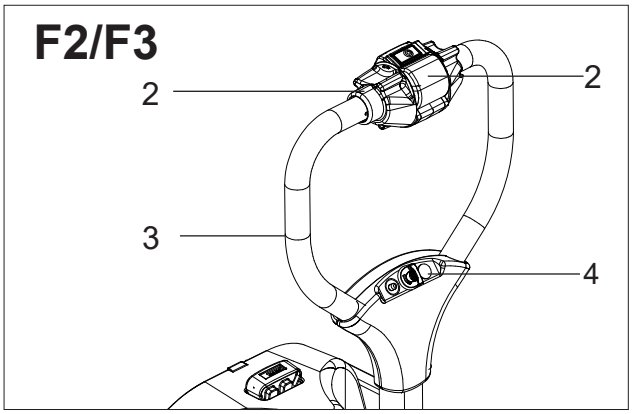

4.2.7 Steering

Move the control hand to the left (1) or right (2).

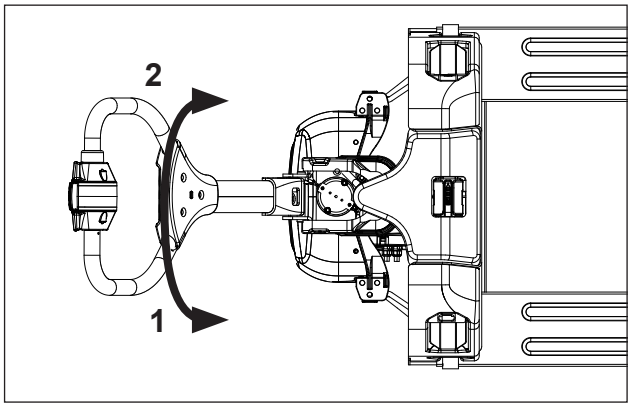

4.2.8 Parking the truck securely

- Drive the truck to safe area or appointed area.
- Lower the forks to the bottom;
- Turn off the key switch(1) ;
- Pull out the supply plug (2）;

⚠WARNING

- *Should it be necessary for operators to leave the truck, even for just a moment, the truck should also be well parked as specified.*
- *The trucks are not allowed to park on the slopes.*
- *The forks must be lowered to the bottom.*

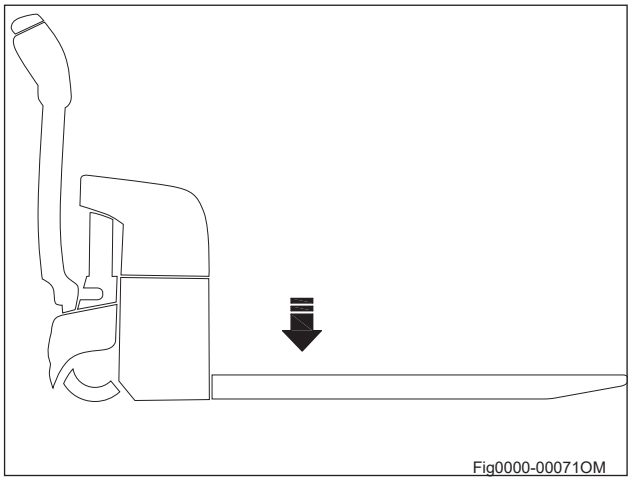

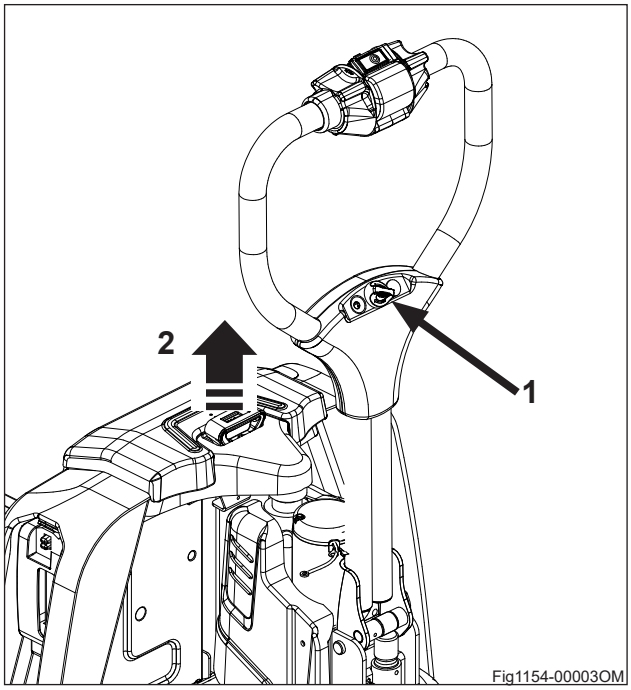

4.2.9 Braking

➢ **Mechanical operating brake**

The truck is braked when the operating handle is released.

The mechanical brake engages when the tiller is positioned in (B） area.

⚠ CAUTION

If the control handle moves slowly into the brake position, identify the cause and rectify the fault. If necessary, replace the spring!

➢ **Regenerative braking**

Release the drive switch. The drive switch will automatically return to the initial position and the vehicle will begin to enter the regenerative braking state. When it decelerates to <1 km/h, the electromagnetic brake will bring the motor to a stop.

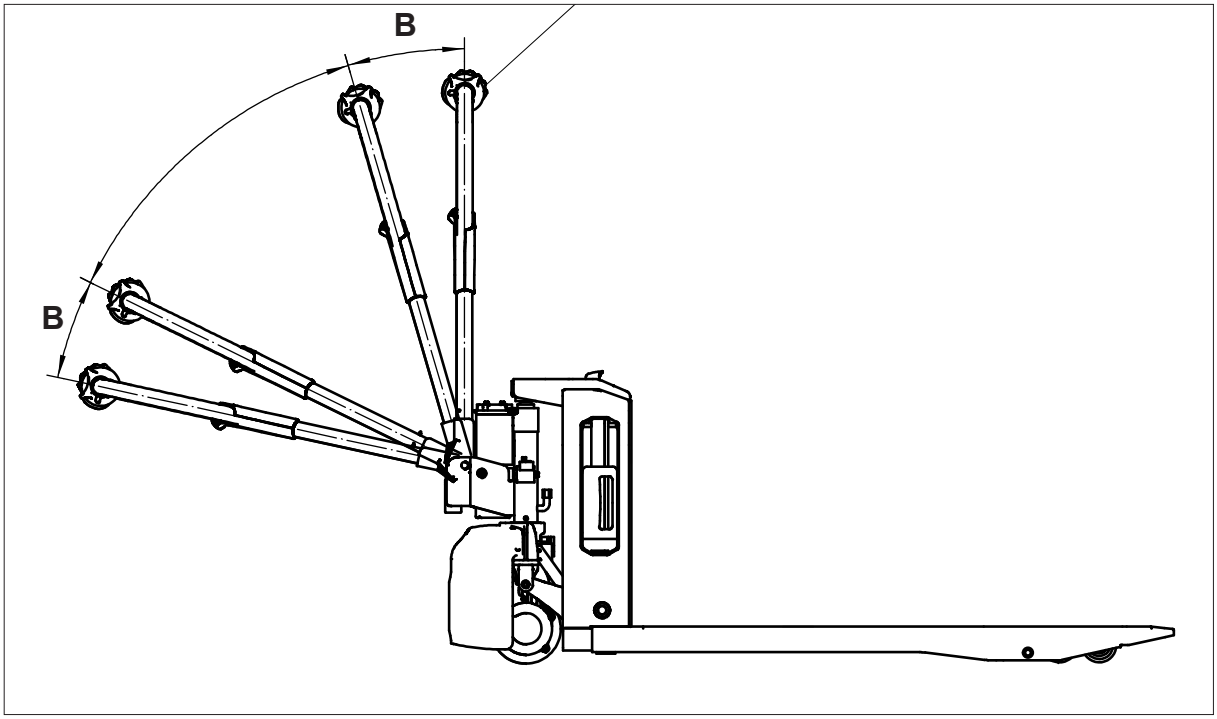

➢ Reverse braking

Braking can be accomplished by changing the direction of travel.
Press the reverse switch in the opposite
direction until the truck comes to a stop,
then release the drive switch.

⚠ CAUTION

Open the drive switch; if the drive switch cannot quickly return to the initial position or resets very slowly, identify the cause and rectify the fault.

➢ Parking brake

The mechanical brake applies automatically when the truck comes to rest.

➢ Supply plug

Pull out the supply plug, and then all the electrically propelled functions will be interrupted.

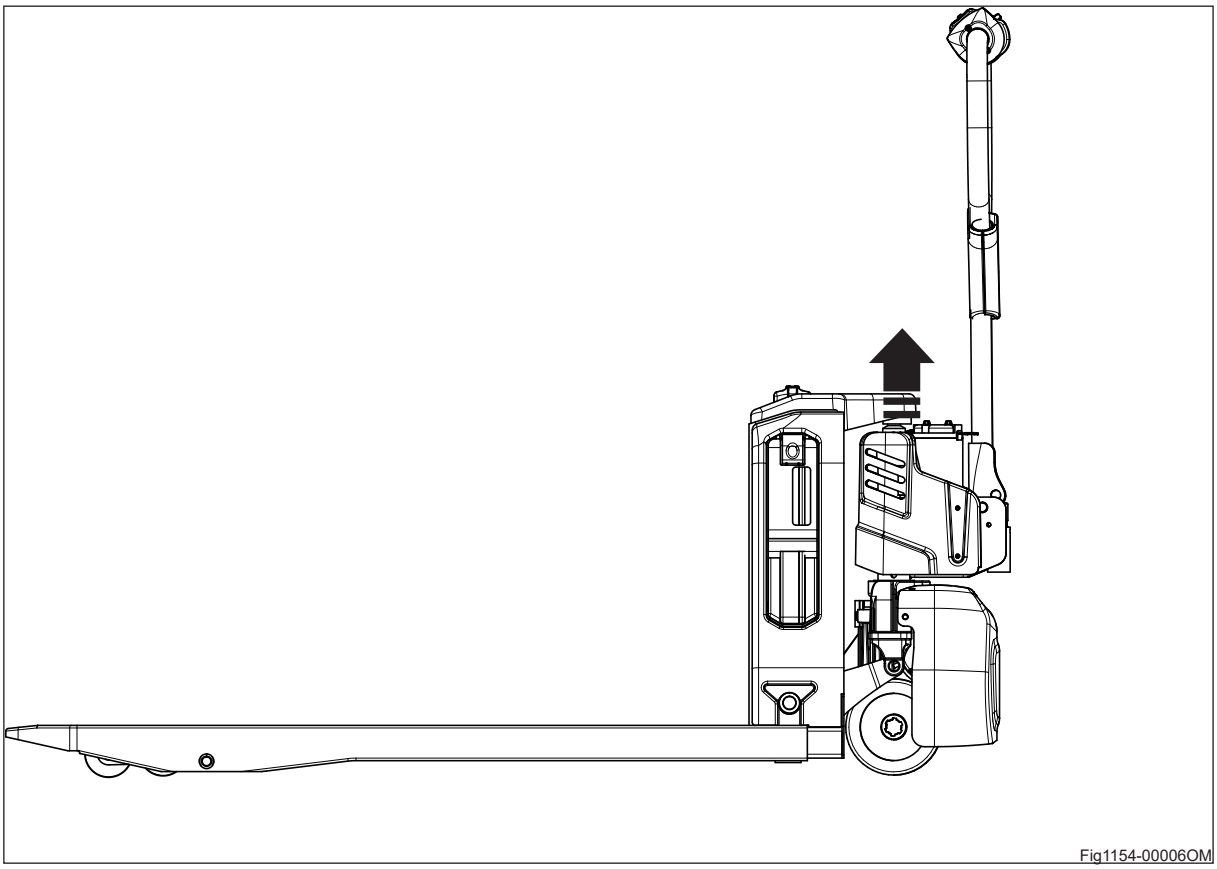

4.2.10 Using the truck on a slope

Be particularly careful near slopes:

Never attempt a slope with a gradient greater than that specified in the truck's data sheet. Make sure that the ground is dry with a non-slip surface and that the route is clear.

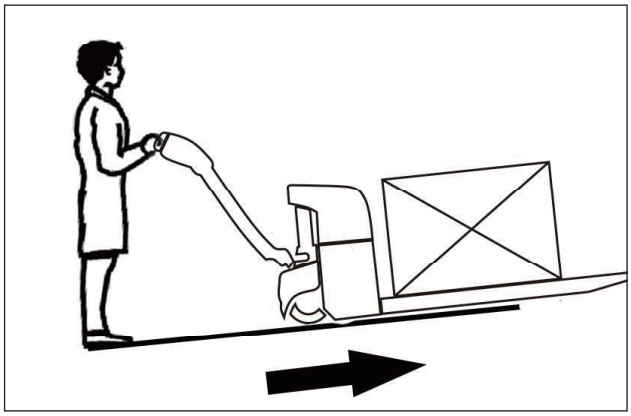

➢ **Ascending slopes**

Always ascend slopes travelling in the reverse direction, with the load facing uphill. Without a load, it is recommend to ascend slopes forwards.

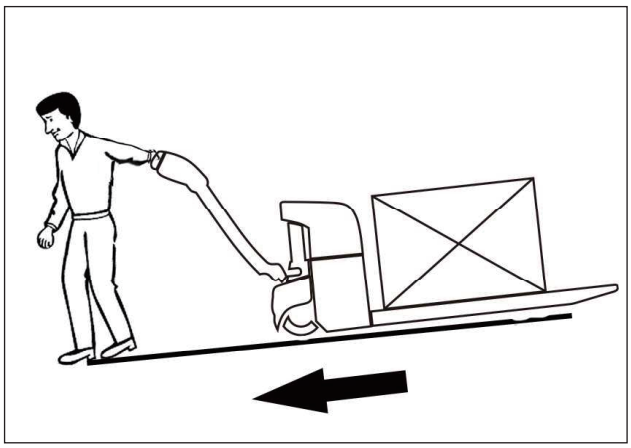

➢ **Descending slopes**

Travel down slopes must always be forwards, with the load uphill. Without a load, it is recommended to descend slopes forwards. In all cases, travel at a very low speed and brake very gradually.

⚠ DANGER

- *Risk to life and/or risk of major equipment damage.*
- *Never park the truck on a slope.*
- *Never make a U-turn or take shortcuts on a slope. On a slope, the operator must drive very slowly.*

➢ **Starting on a slope**

If you have to stop and then start on slope, proceed as follows:

- Stop on the slope by pressing the accelerator in the opposite direction until the machine comes to a standstill.
- Return the accelerator to the neutral position, then release the accelerator control button to apply the parking brake.
- To restart, press the accelerator button for the desired direction.
- The truck will move.

ⓘ NOTE

Incorrect use of the truck on slopes places stress on the traction motor, brakes and battery.

4.3 Handling loads

4.3.1 Loading

- Approach the load carefully.
- Adjust the height of the forks until they can be easily inserted into the pallet. Insert the forks under the load.
- If the load is shorter than the forks, position the forks so that the front of the load overhangs them by a few centimeters, to avoid interference with the load immediately ahead.
- Raise the load a few centimeters above its support.
- Drive the truck away from the stack or any neighbouring loads, gently and in a straight line.

4.3.2 Transporting loads

Always carry loads in the forward direction of travel (F) in order to have the best visibility.

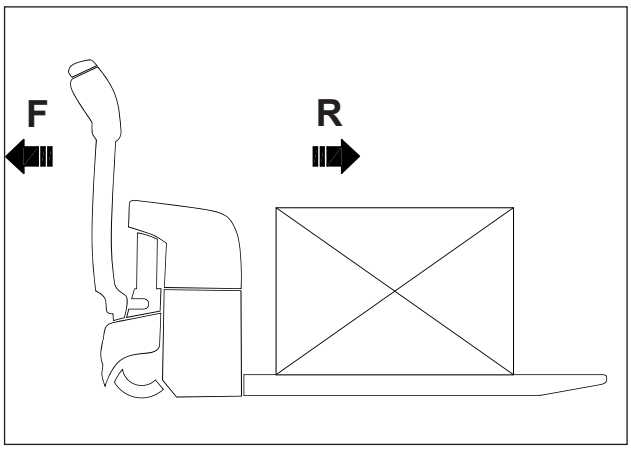

⚠ WARNING

When carrying a load on a slope, always ascend or descend with the load uphill. Never drive sideways across a slope or perform a U-turn.

ⓘ NOTE

Since visibility is reduced when travelling in this direction, drive only at very slow speed.

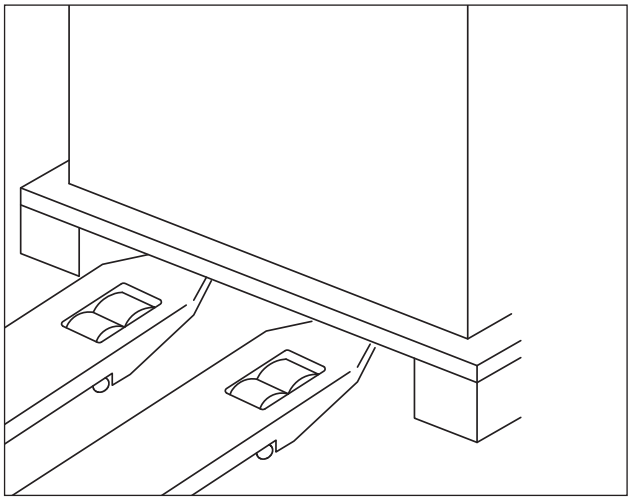

4.3.3 Unloading

- Carefully drive the truck to the desired location.
- Carefully drive the truck to the unloading area.
- Lower the load until the fork arms are free from the pallet.
- Drive the truck away in a straight line.
- Raise the forks to proper height.

⚠ CAUTION

If the field of vision is poor, ask a guide for assistance.

4.3.4 Goods picking

- Keep pressing the lifting button (1) until reaching the required lifting height.
- Lower the pallet forks to the bottom through pressing the lowering button (2).

⚠ WARNING

Goods failing to be arranged and fixed may result in accidents.

ⓘ NOTE

To avoid shortening the service life of the oil cylinder, try not to lift the forks to the highest state for lifting.

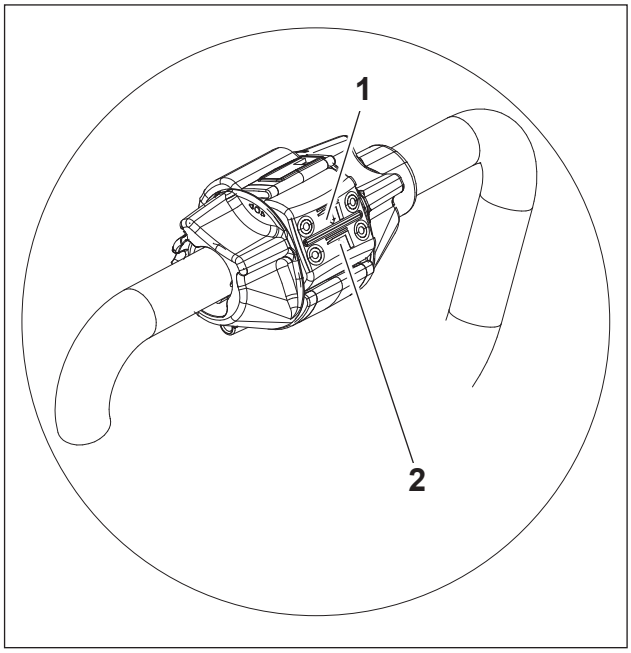

4.4 Transport

4.4.1 Location for lifting and/or slinging points

- Park the truck securely
- Secure the lifting slings to the strap point, and prevent them from slipping. Crane slings
- should be fastened in such a way that they do not come into contact with any attachments when lifting.
- Load the truck and park it securely at its destination.

⚠ DANGER

Personnel must not stand below or near the truck when the pallet truck is being lifted.

Only use lifting gear with sufficient capacity (for truck weight see truck nameplate).

When hoisting or laying down, it should be stable and slow to avoid collision or accident.

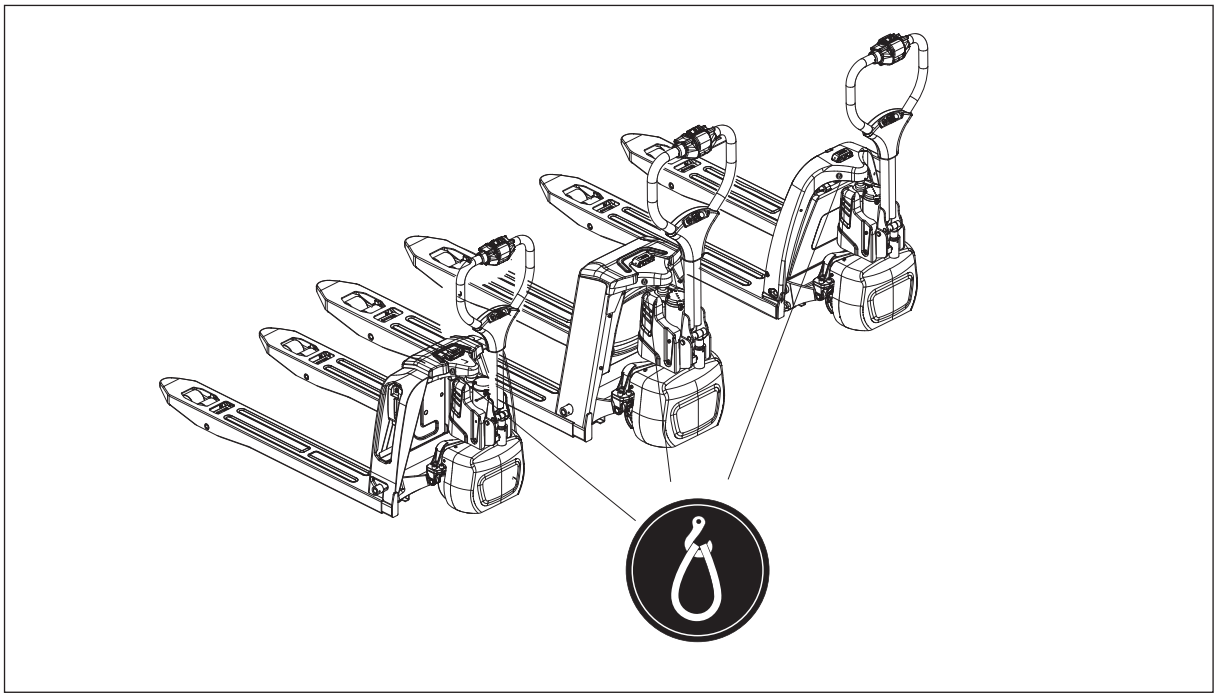

4.4.2 Securing the truck during transport

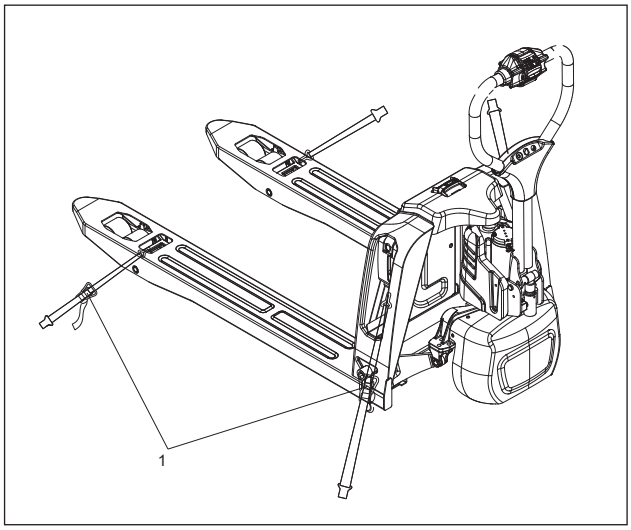

Correctly fix the truck to avoid move when using truck or trailer.

Procedure:

- Park the truck securely.
- Sling the tensioning belt around the truck and attach it to the fastening rings of the transporting vehicle.
- Use wedges to prevent the truck from moving.
- Tighten the tensioning belt with the tensioner.

⚠ WARNING

- *The truck or trailer must have fastening rings.*
- *Use wedges to prevent the truck.*
- *Only use tension belt or fastening belt of good nominal strength.*

4.4.3 Transport

The pallet truck is designed for short-distance material handling only and is inappropriate for long-distance transportation. If needed, the truck must be transported by using lifting device or platform to place it on truck or trailer. Before operation, fix the pallet truck firmly on the transport vehicle with belt, and block the wheel to avoid relative motion during transportation.

ⓘ NOTE

The truck must be suitably protected from the effects of the weather during transport and storage.

To load or unload the truck, use an inclined plane or a mobile ramp.

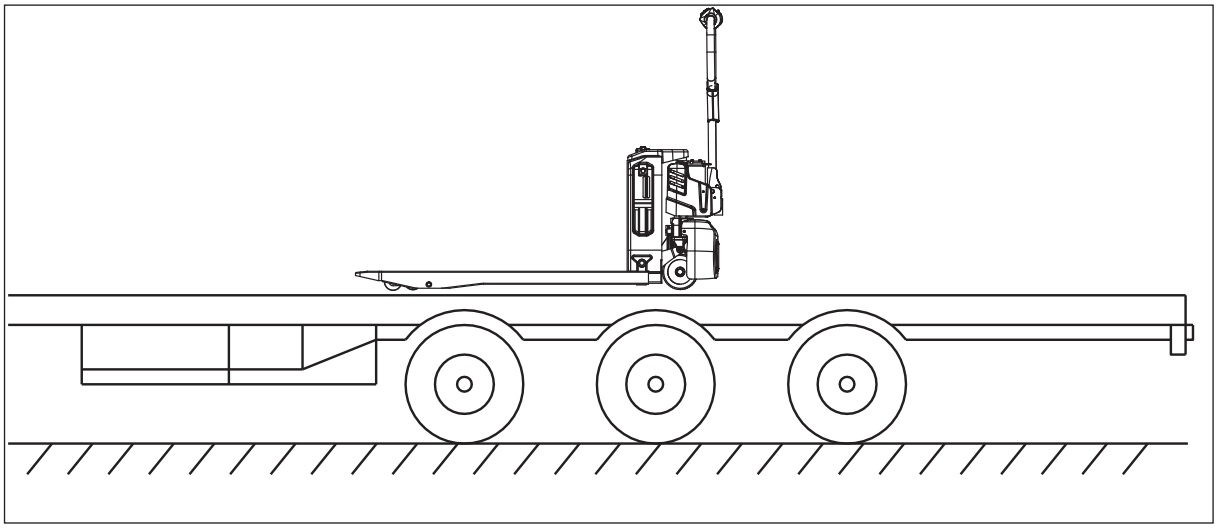

➢ How to remove a broken truck

It's not allowed to tow the truck on the ground directly when the truck is broken down or damaged since the brake of the truck is closed under normal circumstances. Appropriate vehicles should be used to remove the broken trucks.

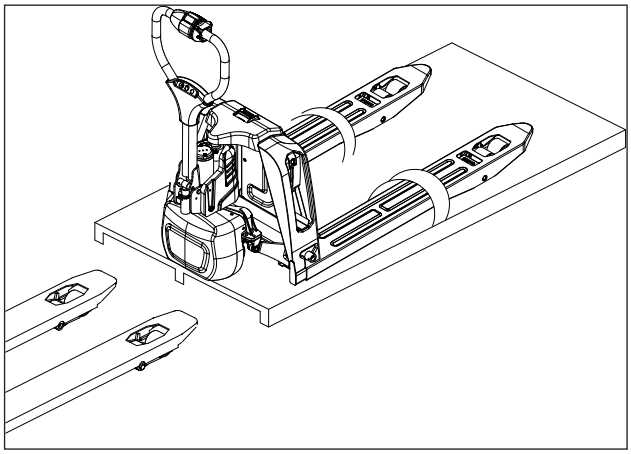

NOTE

Only use haulage equipment with sufficient load capacity.

NOTE

- *The load weight includes the net weight of the truck(including battery weight) and the wooden pallet.*
- *The pallet or wooden box should be large and strong enough to withstand the weight of the truck.*
- *Pay attention to the fork blades when lifting the truck onto the pallet, to prevent injuries caused by the forks.*

NOTE

Follow the prescribed steps and park the vehicle correctly.

NOTE

Make sure the forks are aligned with the pallet, move slowly and stop after inserting the forks as far into the pallet as possible.

⚠ CAUTION

Operate on open, level ground and pay attention to ground conditions when lifting and lowering the pallet to prevent the truck from tipping.

When transporting the truck, make sure it is fully secured and take precautionary measures against bad weather.

➢ Operating the truck without its own drive system

If the truck has to be moved after a failure has rendered it immobile, proceed as follows:

- Set the emergency stop switch “OFF”.
- Set the key switch “OFF” and remove the key.
- Prevent the truck from rolling away.
- Remove the cover.
- Screw in two screws(1), M4*30mm) until the truck can be moved (no braking action).
- Set the emergency stop switch “ON”.
- Set the key switch “ON”, which the truck powered all the time.
- After setting down the truck at the destination, unscrew two screws (1). Braking action is restored.

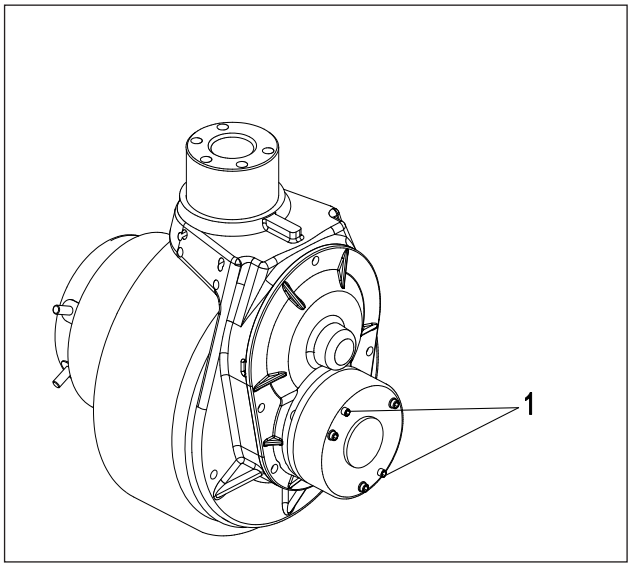

ⓘ NOTE

Inoperative trucks movement after brake release must ensure that the power of the truck is on or risk damaging the truck controller.

⚠ WARNING

This operating mode is not permitted when negotiating inclines and gradients.

4.5 Battery and Chager

4.5.1 Information for battery and charger

Truck type	Battery type	Voltage/ Rated capacity	Charging time (used 5A Charger)	Dimensions[1)]
F2/F3	ZL2420-91	24V/20Ah	4h	312*210*75
F4				290*235*75
[1)]The battery handle is installed in different directions.				

NOTE

Manufacturer of battery:
Name:EP Equipment Co.. Ltd.
Address:Xiaquan village, Lingfeng street, Anji County, Zhejiang Province, 313300, China
Web:https://ep-equipment.com

4.5.2 Safety regulations for Charging the battery

- Avoid the existence of any metal object in the surface of the lithium-ion battery;
- Do not pierce the battery case with nails or other sharp objects.
- Do not short-circuit the battery with wires or other metal objects!
- The plug connection parts should be inspected in terms of obvious damages before charging;
- Fire-fighting equipment must be kept in the charging place;
- Before charging, check if there is damage on cable connection and plug connection pieces.
- Do not use irregular charging sockets;
- Charging in non-charging area is prohibited;
- No inflammable substances or spark-generating materials being present or stored within a distance of 2 metres of the truck parked for battery charging.
- No smoking or open fire around when charging.
- When charging, do not wrongly connect the battery polarity, otherwise it may damage the battery.
- Please charge the lithium-ion battery at an ambient temperature of 0°C to 40°C. Do not charge the lithium battery below 0°C.
- The safety provisions related to the lithium-ion battery and the manufacturer of charging station must be strictly abode by.

NOTE

The workplace regulations must be observed (emergency exits, escape routes, traffic routes, ...) must be kept clear.

Lithium-ion battery systems offer the advantage that they can be recharged temporarily, allowing industrial trucks to be charged at any time. As a result, shorter charging times can usually be achieved and charging with higher currents is also possible.

4.5.3 Charging the battery with an external charger

- Park the truck securely;
- Pull up the supply plug and remove the lithium-ion battery according to section 1.2 Battery removal and installation;
- Visual Inspection the external charger;
- If undamaged, Insert the charger charging plug into the battery plug;
- Insert the charger power plug into a suitable power outlet.

NOTE

The charge indicator lights up, the battery is charging.

- *LED charging indicator: Red charging*
- *LED charging indicator: Green charged*

WARNING

Charger 24V/5A maximum input power 166W .

Please strictly implement the above data to prevent equipment damage and accidental risks such as fire.

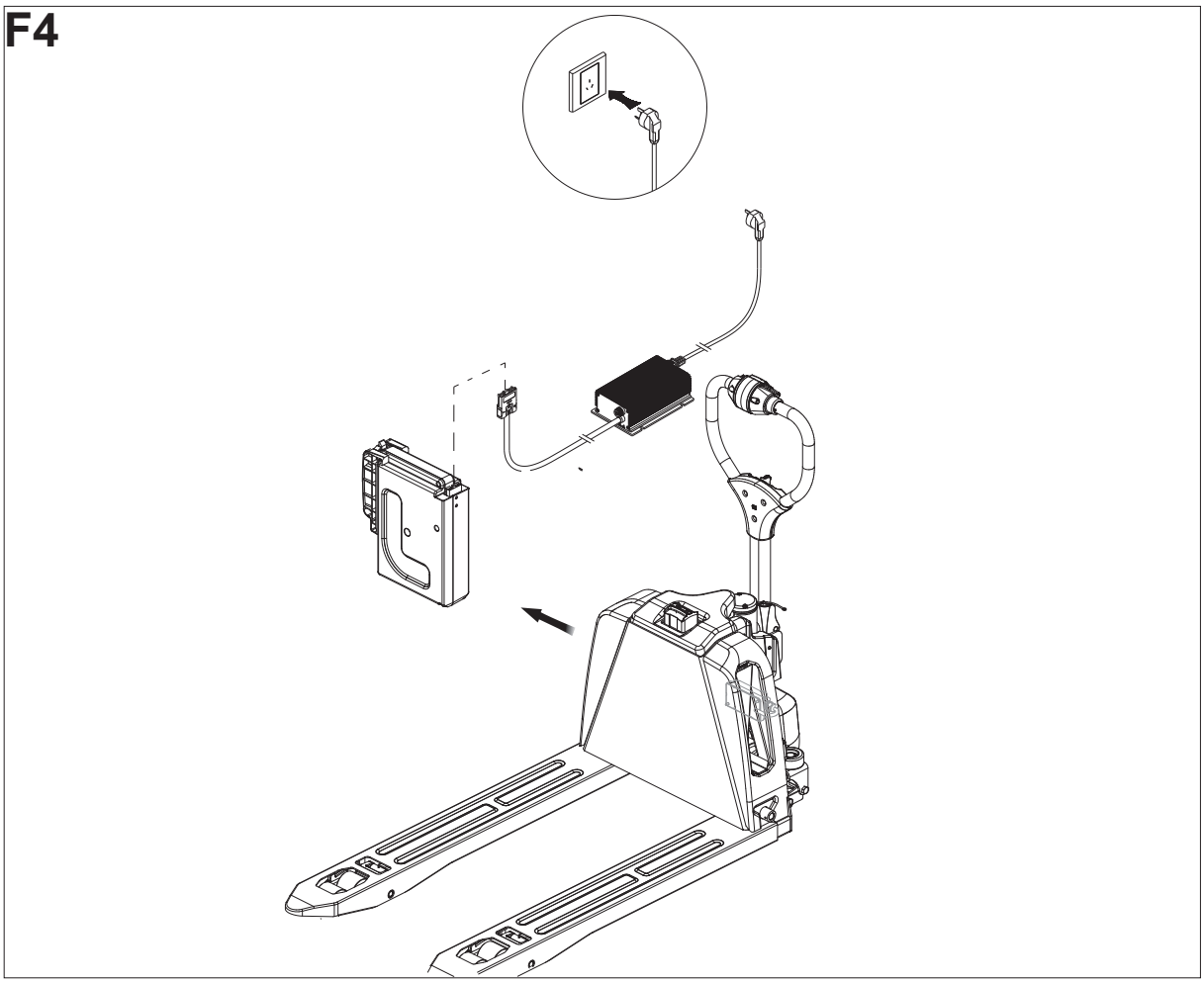

F2

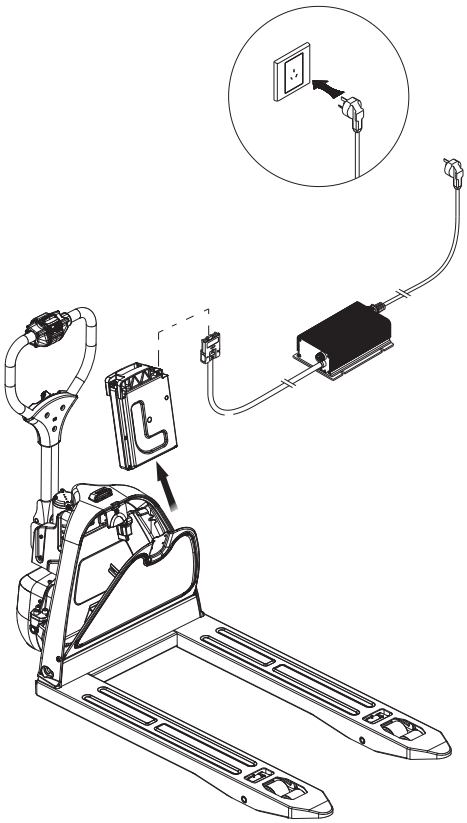

F3

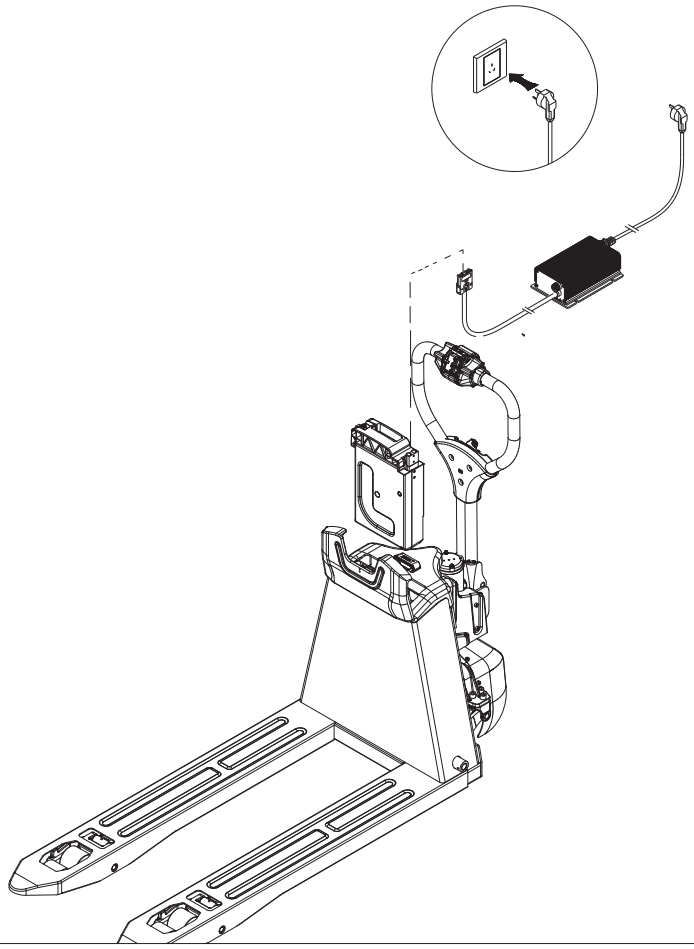

The battery is fully charged after
4.0 hours of charging at 100 ~ 240V AC;

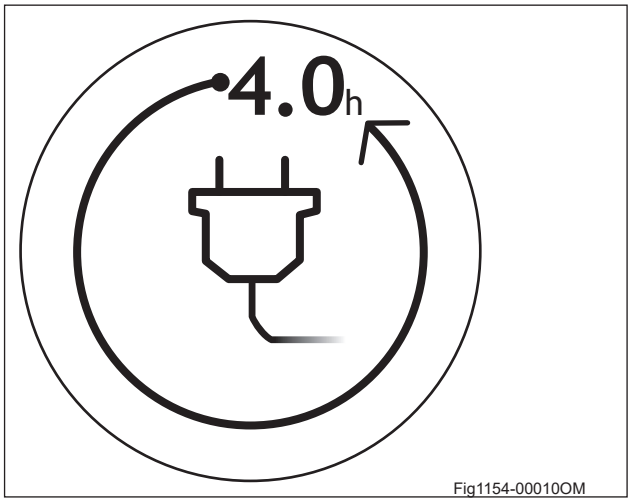

Fig1154-00010OM

The battery can be operated continuously for 2.0 hours in a fully charged state.

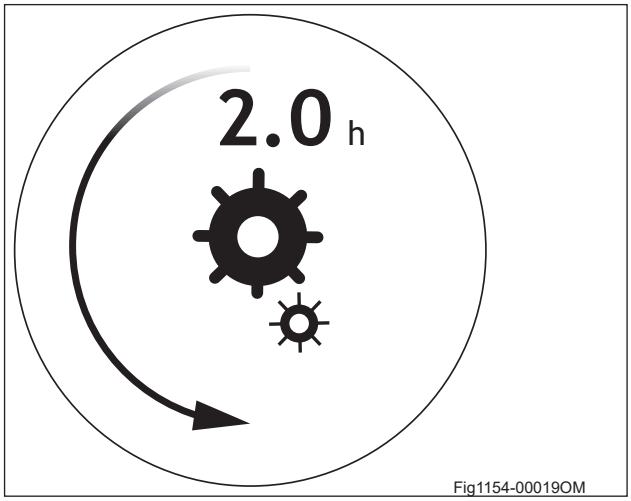

Fig1154-00019OM

⚠ WARNING

Store the charger in a clean, and dry environment after charging. Do not place the charger in the frame to prevent damage to the charger after outdoor rain, and cause dangerous accidents such as short circuit or fire in the charging process.

⚠ WARNING

Damage to battery and charger!

- *The charger must be matched to the battery in terms of voltage and charging capacity!*
- *Observe the correct combination of battery and charger to avoid overheating and fire hazard.*
- *Only use the charger that is suitable for the corresponding battery.*

4.5.4 Battery removal and installation

Park the truck securely (Page 32 Section “4.2.8 Parking the truck securely”) and turn off the power before removal and installation of the battery.

➢ **Battery removal and installation steps:**

For F4

- Open the cover (1)and Pull out the plug assembly handle (2);
- Hold the battery handle and remove the lithium-ion battery from one side;

⚠ WARNING

Before removing the battery, make sure the vehicle is completely powered off.

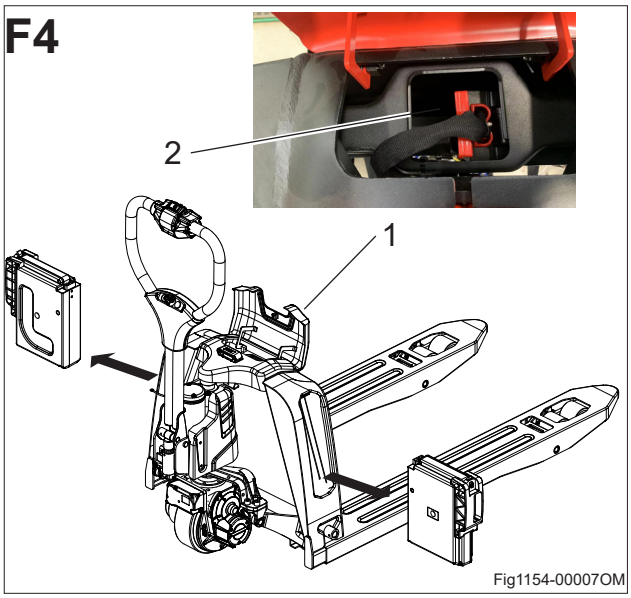

For F3

- Open the upper cover(1) and Pull out the plug assembly handle(2);
- Hold the battery handle and remove the Lithium-ion battery from the battery base;

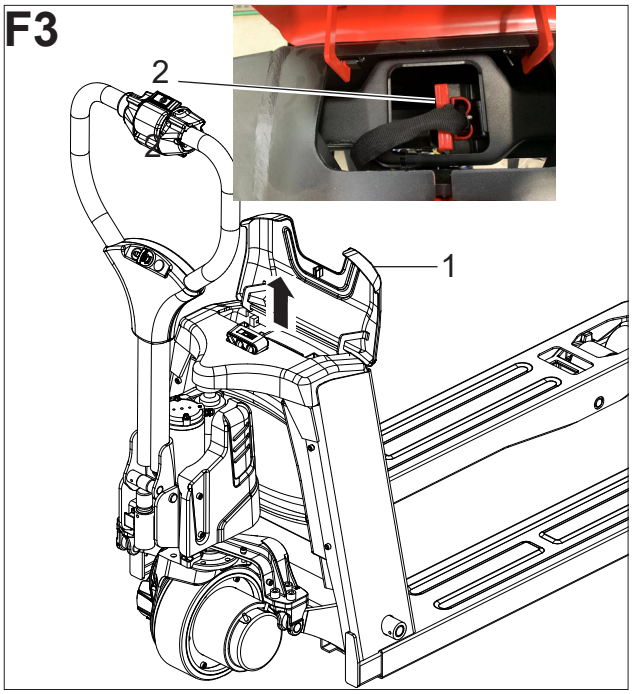

For F2

- Press the button and open the side cover(1) ;
- Pull out the plug assembly handle(2)
- Hold the battery handle (3) and remove the Lithium-ion battery from the battery base;

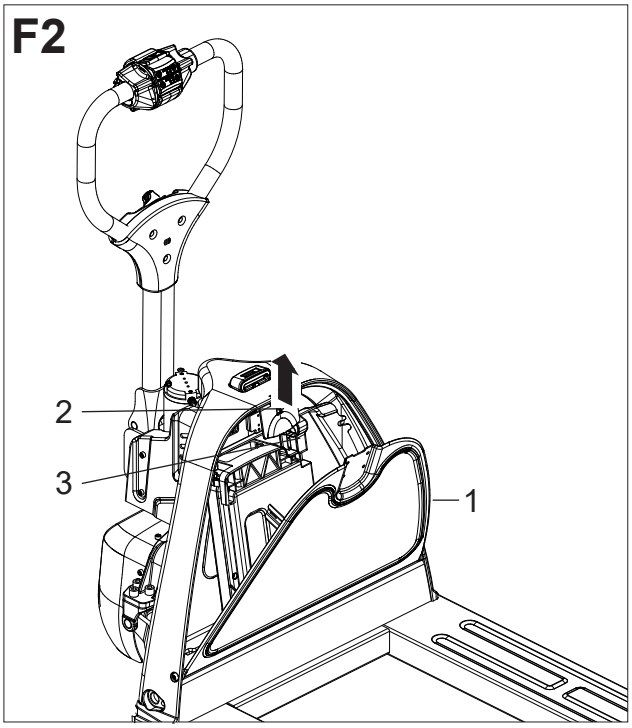

4.6 Cleaning

Clean the truck

Washing instructions

- Always park the truck as specified.
- Disconnect the battery connector .

⚠ CAUTION

Disconnect the battery connector when washing the truck.

Washing the exterior of the truck

⚠ WARNING

Do not use inflammable fluids for cleaning. Observe the above safety precautions for preventing sparks through shorts (disconnecting the battery connector). When the truck is being cleaned, carefully cover all vulnerable components, particularly electric components. Observe the manufacturer's instructions for handling the cleaners.

- Clean the truck exterior with water and cleaning agents soluble in water (sponge, rags).
- Clean especially the oil filler openings and the surrounding area.
- Grease the required assemblies (mast, controls and joints).
- Clean the truck exterior with water and cleaning agents soluble in water (sponge, rags).
- Clean especially the oil filler openings and the surrounding area.
- Grease the required assemblies (mast, controls and joints).

Cleaning the electrical system

⚠ WARNING

Do not aim the steam cleaning device directly on electric motors and other electric components, brakes and bearings.

ⓘ NOTE

Use only dry cleaning agents as cleaning agents. Do not remove covers, etc.

- Clean electrical components with a nonmetallic brush and blow dry with a weak jet of air.

After washing the truck.

- Dry the truck thoroughly (e.g. with compressed air).
- Take the truck back into operation according to recommissioning.

  If moisture has penetrated the motors despite the precautionary measures, dry them first with compressed air; if not, there is the risk of short circuits! The truck must only then be turned on and taken into operation to prevent any damage due to corrosion.

5 Maintenance

5.1 Operational safety and environmental protection

The servicing and inspection operations contained in this chapter must be performed in accordance with the intervals indicated in the service checklists.

Only use original spare parts that have been certified by our quality assurance.

Used parts, oils and fuels must be disposed of in accordance with the applicable environmental protection regulations. Upon completion of inspection and servicing, carry out the activities listed in the “Restoring the truck after Decommissioning” section.

5.2 Maintenance Safety Regulations

Lifting and jacking up:

When a fork truck is to be lifted, the lifting gear must only be secured to the points specially provided for this purpose. When the truck is to be jacked up, suitable measures must be taken to prevent the truck from slipping or tipping over (use of wedges, wooden blocks). Work underneath the raised load lifting device must only be carried out when the fork is immobilised and supported by a chain of adequate strength.

Service plan

Maintenance work must be carried out according to the hour meter. Please consult the truck's maintenance plan.

The service plan is followed by advice to facilitate work.

Maintenance intervals must be reduced if the truck is used under harsh conditions (extreme heat or extreme cold, large quantities of dust).

Work on the electric system

Work on the electric system of the truck must only be performed by personnel specially trained for such operations. Before commencing any work on the electric system, all measures required to prevent electric shocks have to be taken. Take off the metal accessories from the hand before checking the forklift electrical system.

Grade and quantity of lubricants and other consumables

Only lubricants and other consumables specified in these operating instructions are authorised for use during maintenance work.

Lubricants and other consumables required for truck maintenance are listed in the maintenance specifications table.

Never mix different qualities of grease or oil.

If it is absolutely necessary to change brands, make sure to flush thoroughly beforehand.

Before changing any filters or working on the hydraulic system, thoroughly clean the surface and the areas around the part. All containers used to pour oil must be clean.

Working on the hydraulic equipment

The hydraulic system must be depressurised prior to all work on the system.

Safety devices

After maintenance and repair work, all safety devices must be reinstalled and tested for operational reliability.

Maintenance operations that do not require special training

Simple maintenance operations such as checking the hydraulic fluid level or checking the battery electrolyte level (if necessary) can be carried out by persons with no special training. A specific qualification is not necessary.

Complicated maintenance operations such as replacing the battery, replacing the wheels and so on should be carried out by the authorised service centre.

Refer to the maintenance section of this manual for further information.

Servicing and maintenance personnel:

Only qualified personnel authorized by the owner are permitted to perform maintenance or repair work. All items listed in the Scheduled Maintenance Charts must be performed by qualified technicians only. They must have knowledge and experience sufficient to assess the condition of a truck and the effectiveness of the protective equipment according to established principles for testing trucks. Any evaluation of safety must be unaffected by operational and economic conditions and must be conducted solely from a safety standpoint.

Daily inspection procedures and simple maintenance checks, e.g. checking the hydraulic oil level or checking the fluid level in the battery, may be performed by operators. This does not require training as described above.

Battery maintenance staff

Batteries must only be recharged, maintained and changed by specially trained personnel.

Personnel must follow the manufacturer's instructions of the battery, the battery charger and the truck.

It is essential to follow the battery maintenance instructions and the battery charger operating instructions.

Ordering spare parts and consumables

Only original spare parts have been certified by our quality assurance department. To ensure safe and reliable operation of the truck, use only the manufacturer's spare parts. Used parts, oils and fuels must be disposed of in accordance with the relevant environmental protection regulations. For oil changes, contact the manufacturer’s specialist department.

5.3 Servicing and inspection

➢ **Maintenance Checklist**

50-hour/ 7-Day maintenance	
1	Check the functions of the operation switches and display.
2	Check display equipment, alarm system and safety devices.
3	Check the emergency reverse switch, reverse braking, emergency disconnect switch and regenerative braking.
4	Check tiller steering functions.
5	Check the drive wheel and load wheel for worn or damage.
6	Check for brake condition when the control handle on horizontal position and vertical position.
250-hour/ 2-month maintenance	
After operating for 250 hours in total, the truck should also be maintained according to the following procedures in addition to the 50-hour maintenance mentioned above	
7	Inspect where there is any damage in the cables and whether the terminals are reliable.
8	Inspect whether there is any screw losing or slipping out.
9	Inspect whether there is any abrasion or damage in the oil pipes.
10	Inspect where is any leakage in the hydraulic oil.
11	Clean and lubricate the contact surface with grease.
500-hour/ 3-month maintenance	
After operating for 500 hours in total, the truck should also be maintained according to the following procedures in addition to the 250-hour maintenance and 50-hour maintenance mentioned above	
12L	Check that the battery cable connections are tight and grease the battery poles if necessary.
13	Check if the signs are legible and complete
14	Inspect and fasten the controller and other electrical apparatus elements
15	Check for oil leakage.
16	Check for oil level, change oil
17	Check if the clearance is proper and adjust, if necessary
1000-hour/ 6-month maintenance	
After operating for 1000 hours in total, the truck should also be maintained according to the following procedures in addition to the 50-hour maintenance,250-hour maintenance and 500-hour maintenance mentioned above	
18	Inspect whether there is any abnormal sound or disclosure of the gear box.
19	Inspect the abrasion situations of the driving wheel/bearing wheel and please timely replace seriously abraded ones.
20	Inspect whether all the oil pipes, pipelines and joints are reliably connected and whether all the sealing elements are reliable.
21	Clean foreign matter
22	Check the frame for damage.
23	Inspect where there is any damage in the oil cylinders and whether corresponding installations are reliable
24	Inspect and check the hydraulic filter,replaced if necessary.

25	Check cylinder block and piston for damage and ensure that they are properly sealed and secured.
26	Inspect whether the bearing capacity reaches the rated load and implement corresponding adjustment through the flood valve adopted in the hydraulic station
27	Inspect whether all the labels are clear and intact
28	Check if there is abrasion between shaft and bearing of front and rear fork.
29	Check if there is deformation or Check if there is deformation or fracture on the upper and down connecting rod.
30	Check for looseness of each joint.
31	Add lubricating grease to the pin roll.
2000-hour/12-month maintenance	
After operating for 2000 hours in total, the truck should also be maintained according to the following procedures in addition to the 50-hour maintenance, 250-hour maintenance, 500-hour maintenance and 1000-hour maintenance mentioned above	
32	Check hydraulic oil level.
33	Replace hydraulic oil.

NOTE

If the forklift truck is used in an extreme environment (such as excessive heat, excessive cold or areas with high dust concentrations), the time intervals given in the maintenance tables should be reduced accordingly.

5.4 Lubrication Points

5.4.1 Lubricant chart

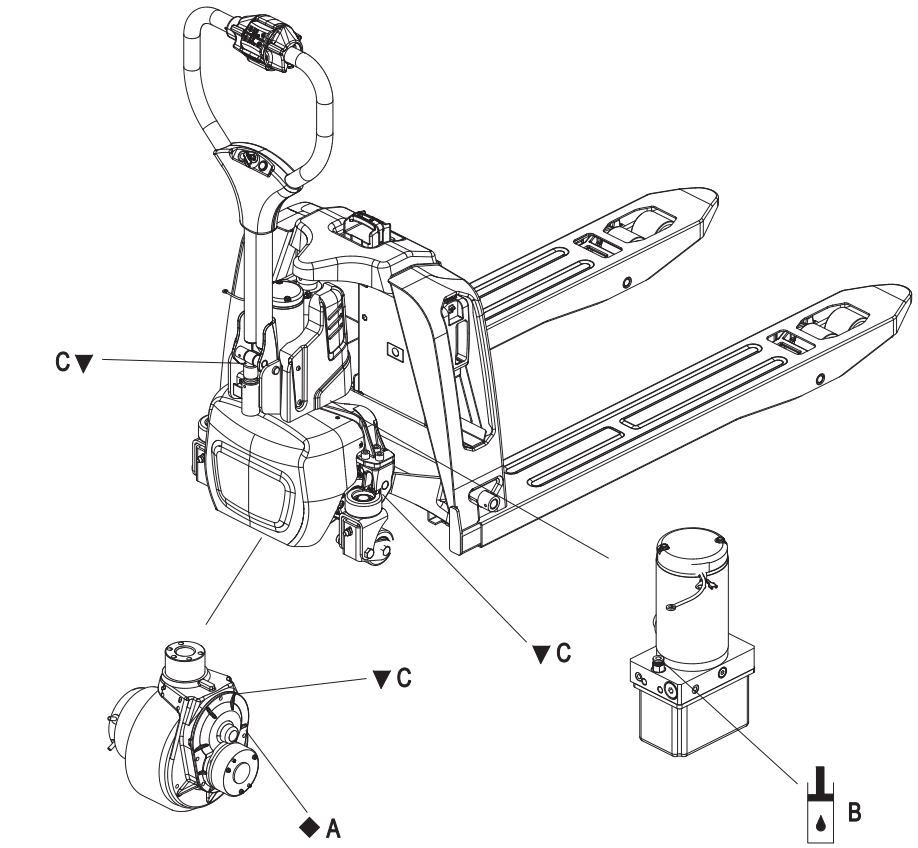

▼ Contact surface

Hydraulic oil injection nozzle

◆ Grease

Fig1154-00023OM

Table 1 Lubricants

Code	Type	Specification	Amount	Position
A	Grease 3#(MoS_2)	-	110 grams	Gearbox
B	Anti-wear hydraulic oil	L-HM32	210-250ml	Hydraulic System
C	Multi-purpose grease	Polylub GA352P	Appropriate amount	Contact Surface

NOTE

Add hydraulic oil till you can't hear explosion sound during lifting any more.

5.5 Maintenance Instructions

5.5.1 Prepare the truck for maintenance and repairs

All necessary safety measures must be taken to avoid accidents when carrying out maintenance and repairs. The following preparations must be made:

Park the truck securely (See Page 32 Section "4.2.8 Parking the truck securely").

Remove the key to prevent the truck from accidentally starting.

When working under a raised lift truck, secure it to prevent it from tipping or sliding away.

5.5.2 Remove the cover

- Unscrew four screws (1), remove driving cover (2);
- Swivil the control handle 90 degrees, unscrew hydraulic cover (4) of the four screws (5) via the spaces.

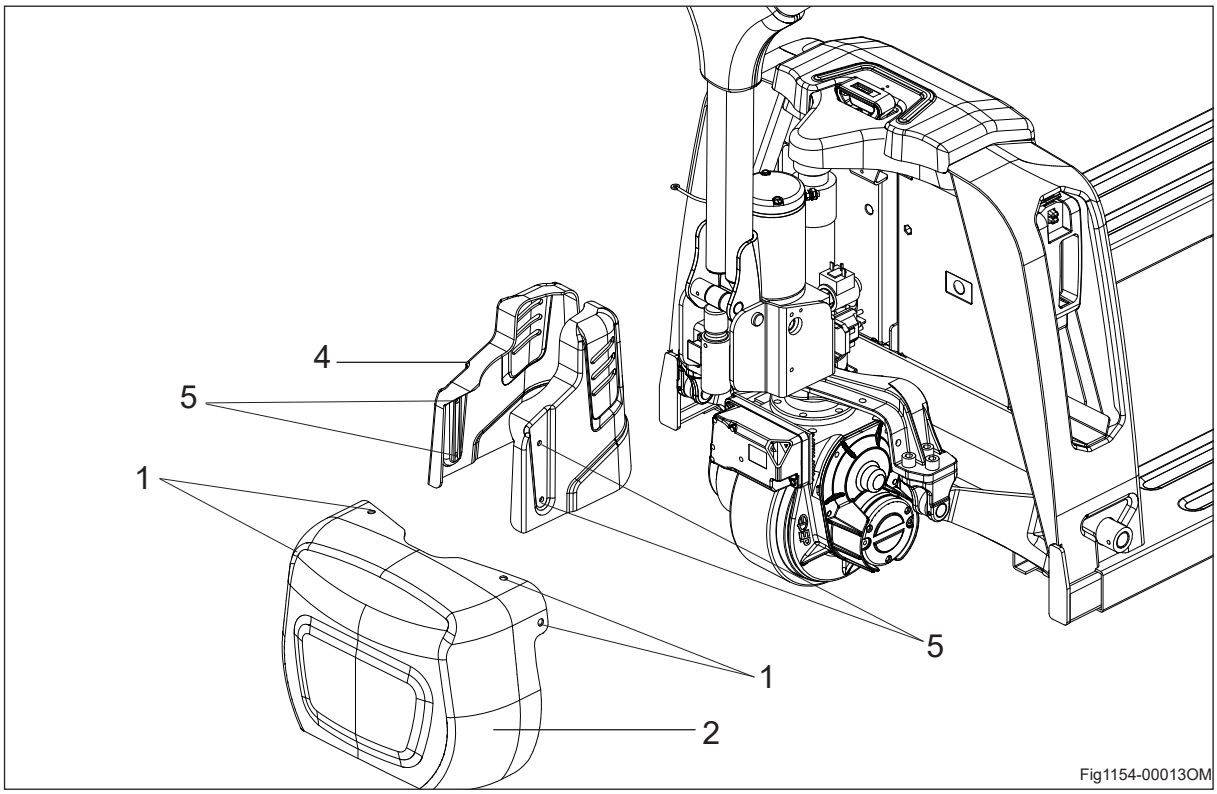

⚠ WARNING

Remove or install the drive cover, carefully clip hand !

When the drive cover is removed, it is dangerous and does not allow operation of the truck.

5.5.3 Checking the gear oil level and replace gear oil

Prepare the truck for maintenance and repairs (See Page 54 Section "5.5.1 Prepare the truck for maintenance and repairs").

Remove the cover

Add grease of the correct grade (See Page 53 Section "5.4 Lubrication Points").

Add transmission oil every 500 operating hours, or at least annually.

Re-installation in the reverse order.

5.5.4 Checking and replace hydraulic oil

- It is necessary to add hydraulic oil when you heard explosion sound from pipe during lifting.
- Prepare the truck for maintenance and repairs (See Page 54 Section “5.5 Maintenance Instructions”).
- Remove the hydraulic cover (See Page 54 Section “5.5.2 Remove the cover”), and take out oil return pipe and connector (1);
- Prepare a measuring tool, a diameter of less than 8mm, about 100mm length of the round rod, the round rod from the filling port about 30~40mm, add hydraulic oil until it hits the oil surface.
- Add hydraulic oil till you can't hear explosion sound during lifting any more.
- Re-installation in the reverse order.

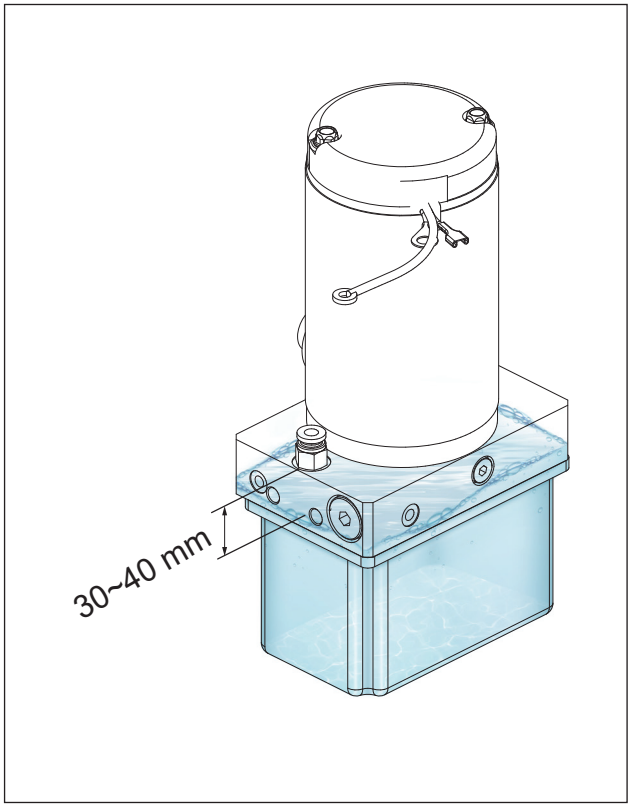

⚠ WARNING

Prohibit the amount of hydraulic oil cannot overflow the refueling port.

The round rod should be clean and resistant to corrosion.

5.5.5 Checking electrical fuses

- Prepare the truck for maintenance and repairs.
- Check condition and rating of the fuses in accordance with your parts manual or service manual.

5.5.6 Servicing wheels and tyres

The wheel must only be replaced by authorised service personnel.

5.6 Decommissioning the trucks

If the truck is to be out of service for more than a month, it must be stored in afrost-free, clean, dry location and 0-40°C condition. All necessary measures must be taken before, during and after decommissioning as described hereafter.

When the truck is out of service it must be jacked up so that all the wheels are clear of the ground. This is the only way of ensuring that the wheels and wheel bearings are not damaged.

If the truck is to be out of service for more than 6 months, agree further measures with the manufacturer’s customer service department.

5.6.1 Prior to decommissioning

Clean the truck thoroughly.

Check the hydraulic oil level and top up if required.

Apply a thin layer of lubricating oil or grease to all nonpainted mechanical components.

Lubricate the truck in accordance with the lubrication schedule.

Charge battery

NOTE

Do not cover the forklift truck with plastic film as it may gather water vapour.

⚠ CAUTION

If the battery is not used for a long period of time, it can become damaged through discharge.we recommend charging the battery every two month for lead-acid battery/ three month for lithium-ion battery.

5.6.2 Restoring the truck to operation after decommissioning

Thoroughly clean the truck.

Clean the battery. Grease the pole screws using pole grease and reconnect the battery.

Recharge the battery.

Check if the hydraulic oil contains condensed water and change if necessary.

Follow the daily checklist.

5.6.3 Final decommissioning, disposal

Final, proper decommissioning or disposal of the truck must be performed in accordance with the regulations of the country of application. In particular, regulations governing the disposal of batteries, fuels, hydraulic oil, plastic and electronic and electrical systems must be observed.

The truck must only be disassembled by trained personnel in accordance with the procedures as specified by the manufacturer.

Disposal of consumables

Materials that have to be disposed of following maintenance, repair and cleaning must be systematically collected and disposed of in accordance with regulations. Observe the national regulations for your country. Work may only be carried out in areas designated for this purpose. Take care to minimise, as far as possible, any impact on the environment.

- Any spillage of fluids such as hydraulic oil, brake fluid or gear lubricant oil must be immediately soaked up with an oil-binding agent.
- The regulations for disposal of used oil are applicable.
- Any spillage of battery acid must be neutralised immediately.

Disposing of components and batteries

The truck is made up of different materials.

If components or batteries must be replaced and scrapped, they must be:

- disposed of
- treated or
- recycled in accordance with regional and national regulations

NOTE

The documentation provided by the battery manufacturer must be observed when disposing of batteries.

NOTE

We recommend working with a waste management company when disposing of components and batteries.

6 Troubleshooting

If the fault cannot be rectified after carrying out the remedial procedure, notify the Manfacture's sevice department, as any further troubleshooting can only be performed by specially trained and qualified service personnel.

Fault	Probable Cause	Action
Truck does not start.	–Battery connector not plugged in –Key switch in “0” position –Incorrect LED Fault indicator –Battery charge too low –Faulty fuse –Truck in charge mode	–Check the battery connector and connect if necessary. –Set key switch to “I” –Check LED Fault indicator –Check battery charge, charge battery if necessary –Check fuses. –Interrupt charging
Load cannot be lifted	–Charging capacity below 15% –Truck not operational –Hydraulic oil level too low –Faulty fuse	–Charging the battery –Carry out all measures listed under “Truck does not start” –Check the hydraulic oil level –Check fuses.